Table of Contents

Page	Sheet Name
01	Title, ToC and Rev History
02	Notes
03	BCC
04	MCU
05	DC-DC & SBC
06	SECURE ELEMENT
07	NFC
08	SWITCH
09	OVERCURRENT
10	EXTRA CAN
11	SWITCH MATRIX

Rev	Date	Revision History
X1	16 AUG 2022	Initial revision
A	31 OCT 2022	Agile release
B	20 JUN 2023	- GATE_IN connected to !Q instead of Q of U10 - added R177, D62, D64, D66 - added R178, C176 - moved C67 to be over R77 - add 2x LPF filter and holes for external NTC for the 2 unused GPIO pins (pin 54 and pin 55) of the BCC (U1) - changed J23 to a female header - Replace the double FET (Q15, Q16) 12V switch with the Toshiba TCKE712BNL,RF - split the battery ground (BGND) and output ground (OGND) - changed R164 to a 100k DNP - added the VCC_12V_EXT to J21 pin 12 - replaced all SS1H10-E3/61T diodes with this ES2B diode - replaced SWITCH MOSFETs with 3 current strings (6 FETs total) with the Nexperia PSMN2R0-100SSF - changed R177 to be a 0805 - added R186, R188, R189 - added SJ19-SJ22
C	12 AUG 2024	- Added fuses for cell leads - Added isolators between MCU and BCC (SPI + sig.) - Fixed voltage ratings - Fixed floating cell5 when using less than 14 cells - Increased FET Tfall time (R159 to 4.7Ohm) - Changed balance resistors to 56Ohm 1210 and 10Ohm 0805 - Added low-pass filters for signals crossing grounds - Added protections for 3V3 LDO and overcurrent circuit - Added diodes to the VPWR replacing ESD diode - Added TVS and normal diode between power_in and BGND - Added PESD2CANFD24L-T to CAN0 - Added LED for CAN0 named LED_CAN0 on PTE3 - Added PMEG2020 diode between Q12 and 12V_ON - Added ESD protection temperature sensor connectors - Added MMSZ3V9T1G zener diode on 3V3_SBC. - Removed the EMC balancing caps, C173, C174, TP6, TP7 - Added more text to explain schematic - A085 ARAS release
D	24/JAN/2025	- Add 2 diodes (PMEG2020EPK) to VDD2 of U31 (D80, D81) - Change the SE050C to SE051C (pin compatible). - Update block diagram (SE050C to SE051C, CAN LEDs) - Add CAD note to D79: "Place LED close to CAN0 connector on top - Add CAD note to D46: "Place LED close to CAN1 connector on top - Replace EOL op-amp U12 (NCX2200GW) by NCV2200SQ2T2G - Adding Interposer 7S in PAge 11 (Switch Matrix)
D1	23/MAY/2025	- DNP all components under Page 7 (NFC) and J7 on page 6 and modifying Block Diagram page 2

MR-BMS771

NXP
6501 William Cannon Drive West
Austin, TX 78735-8598

This document contains information proprietary to NXP and shall not be used for engineering design, procurement or manufacture in whole or in part without the express written permission of NXP Semiconductors.

ICAP Classification: CP: IUO: X PUBL

Designer: Cis van Mierlo	Drawing Title: MR-BMS771		
Drawn by: Cis van Mierlo	Page Title: Title, ToC and Rev History		
Approved: Cis van Mierlo	Size C	Document Number SCH87597 - SPF87597	Rev D1
	Date: Monday, June 09, 2025	Sheet 1 of 11	

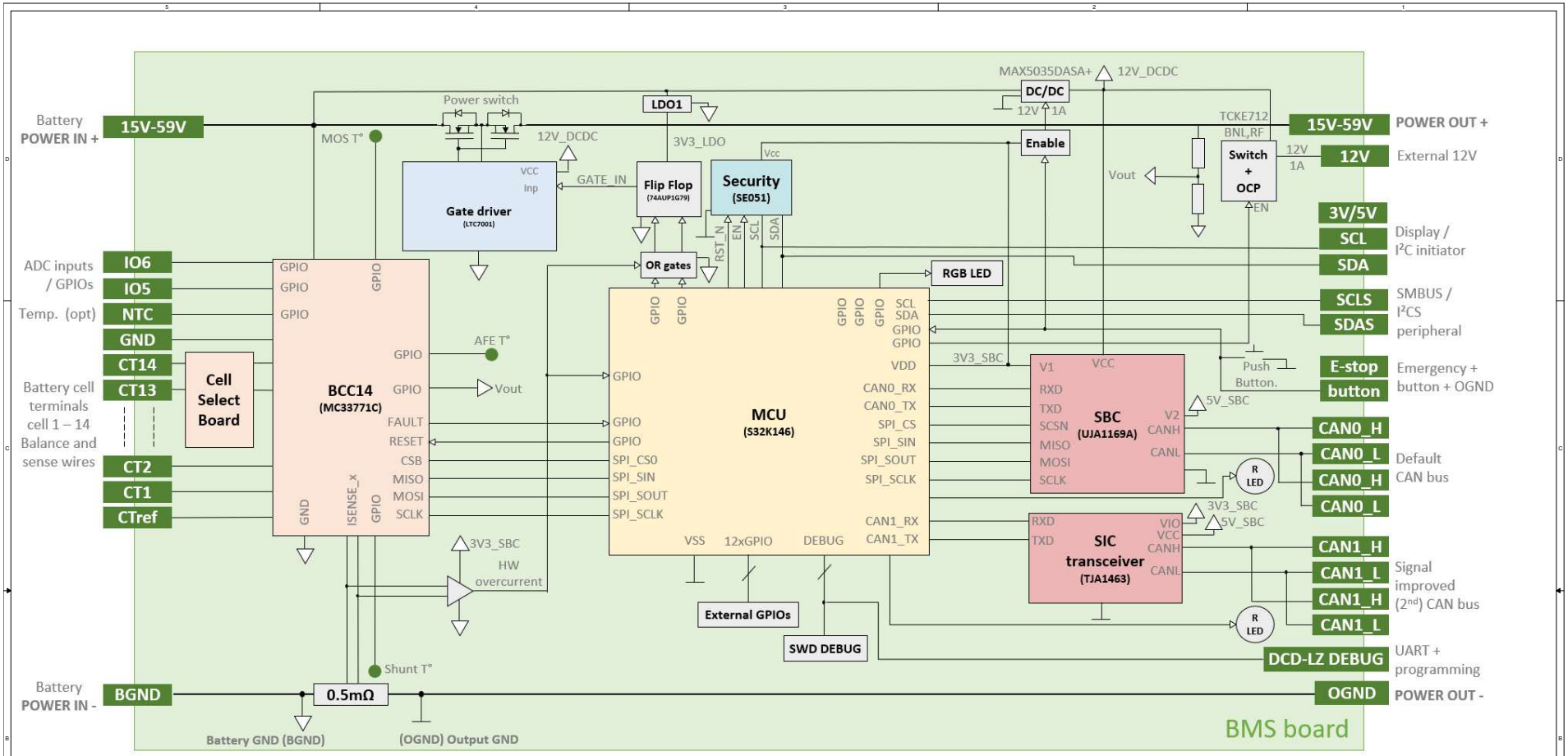

DO NOT POPULATE

REF DES	ASSY_OPT	PAGE NAME
C6,C12,C18,C22,C26,C29,C34, C128,C130,C132,C134,C136, C138,C140,C142,C175,C234, C235,JP1	DNP	03 - BCC
C121,D35,J21,R110,R111,R112, R113,R114,U14A,U14B	DNP	04 - MCU
C66,C179,J6,J22,R49,R50,R163, R164,U7	DNP	05 - DC-DC & SBC
J7	DNP	06 - SECURE ELEMENT
C69,C72,C115,C116,C117,C118, C119,J24,R93,R94,U5	DNP	07 - NFC
C165,D40,J4,J5,R158,R162	DNP	08 - SWITCH
C172,R173,R174,R175,R176	DNP	10 - EXTRA CAN

6501 William Cannon Drive West
Austin, TX 78735-8598

This document contains information proprietary to NXP and shall not be used for engineering design, procurement or manufacture in whole or in part without the express written permission of NXP Semiconductors.

ICAP Classification: CP: IUO: X PUBL

Designer: Cis van Mierlo	Drawing Title: MR-BMS771	
Drawn by: Cis van Mierlo	Page Title: Notes	
Approved: Cis van Mierlo	Size C / Document Number SCH87597 - SPF87597	Rev D1
	Date: Monday, June 09, 2025	Sheet 2 of 11

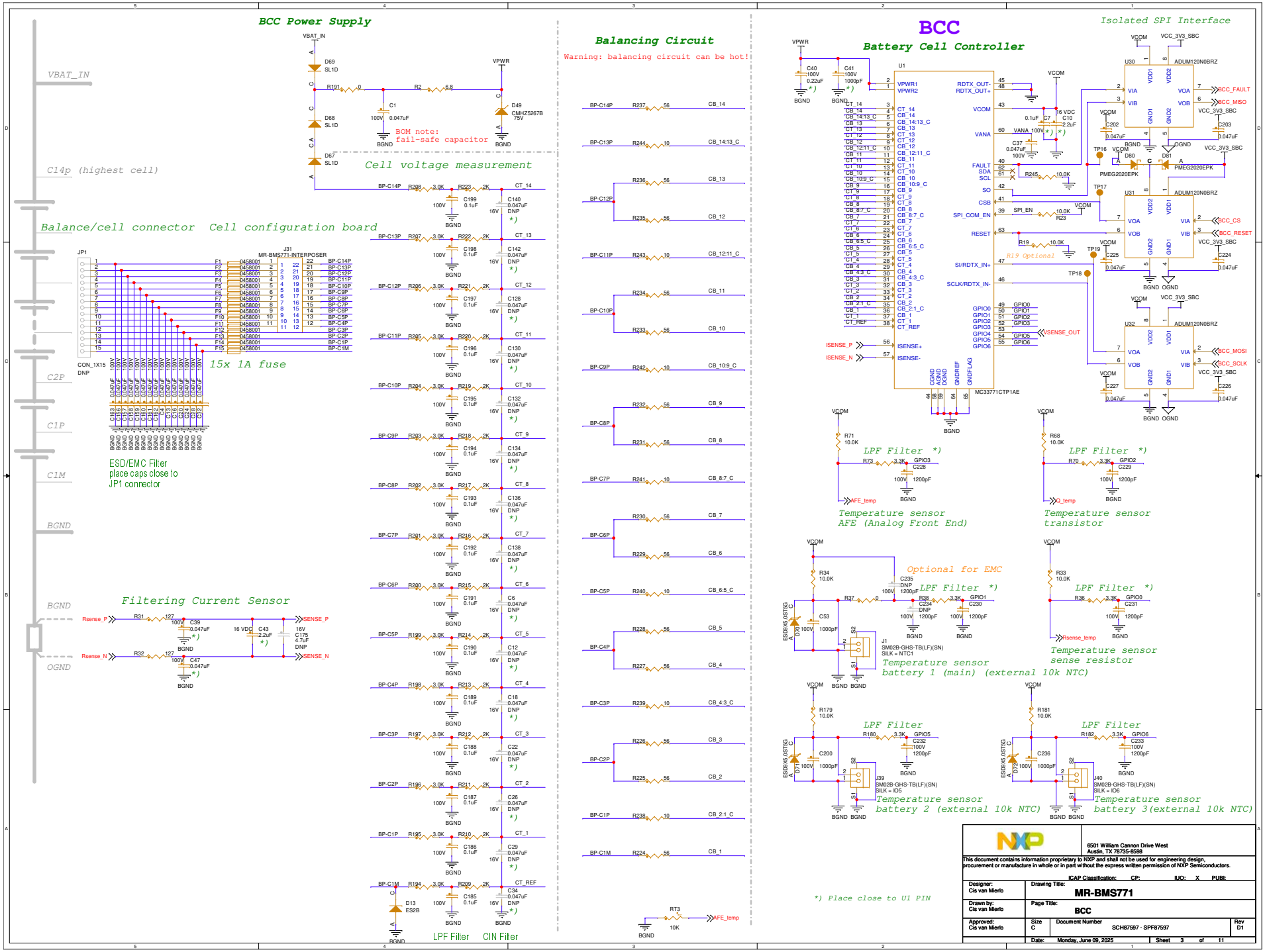
BCC Power Supply
VBAT_IN
D69 SL1D
R191 0
R2 6.8
VPWR
D49 CMHZ5267B 75V
C1 100V 0.047uF
BOM note: fail-safe capacitor
BGND
D68 SL1D
D67 SL1D
C14p (highest cell)
Cell voltage measurement
Balance/cell connector
Cell configuration board
JP1
CON_1X15 DNP
J31 MR-BMS771-INTERPOSER
15x 1A fuse
ESD/EMC Filter
place caps close to
JP1 connector
C2P
C1P
C1M
BGND
OGND
Filtering Current Sensor
Rsense_P
Rsense_N
R31 127
R32 127
C39 0.047uF
C47 0.047uF
16 VDC C43 2.2uF
16V C175 4.7uF DNP
ISENSE_P
ISENSE_N
D13 ES2B
LPF Filter
CIN Filter
Balancing Circuit
Warning: balancing circuit can be hot!
RT3 10K
AFE_temp
BCC
Battery Cell Controller
U1
MC33771CTP1AE
Isolated SPI Interface
U30 ADUM120N0BRZ
U31 ADUM120N0BRZ
U32 ADUM120N0BRZ
VCOM
VCC_3V3_SBC
BCC_FAULT
BCC_MISO
BCC_CS
BCC_RESET
BCC_MOSI
BCC_SCLK
PMEG2020EPK
R19 Optional
LPF Filter *)
Temperature sensor AFE (Analog Front End)
Temperature sensor transistor
Optional for EMC
Temperature sensor battery 1 (main) (external 10k NTC)
Temperature sensor sense resistor
Temperature sensor battery 2 (external 10k NTC)
Temperature sensor battery 3(external 10k NTC)
J1 SM02B-GHS-TB(LF)(SN) SILK = NTC1
J39 SM02B-GHS-TB(LF)(SN) SILK = IO5
J40 SM02B-GHS-TB(LF)(SN) SILK = IO6
*) Place close to U1 PIN
6501 William Cannon Drive West
Austin, TX 78735-8598
This document contains information proprietary to NXP and shall not be used for engineering design, procurement or manufacture in whole or in part without the express written permission of NXP Semiconductors.
ICAP Classification: CP: IUO: X PUBL
Designer: Cis van Mierlo
Drawing Title: MR-BMS771
Drawn by: Cis van Mierlo
Page Title: BCC
Approved: Cis van Mierlo
Size C
Document Number SCH87597 - SPF87597
Rev D1
Date: Monday, June 09, 2025
Sheet 3 of 11

MCU

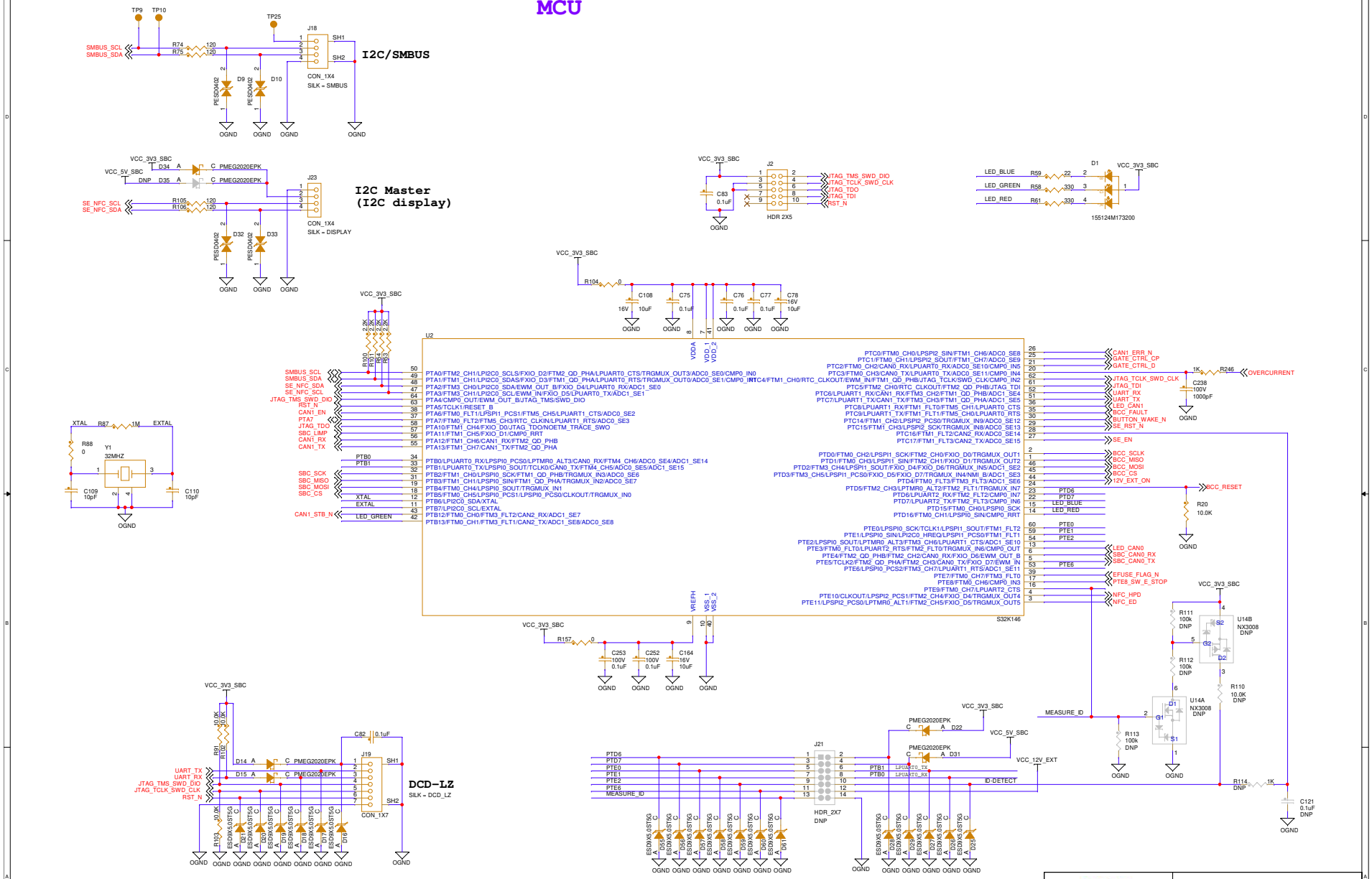

6501 William Cannon Drive West
Austin, TX 78735-8598

This document contains information proprietary to NXP and shall not be used for engineering design, procurement or manufacture in whole or in part without the express written permission of NXP Semiconductors.

ICAP Classification: CP: IUO: X PUBL

Designer: Cis van Mierlo	Drawing Title: MR-BMS771		
Drawn by: Cis van Mierlo	Page Title: MCU		
Approved: Cis van Mierlo	Size C	Document Number SCH87597 - SPF87597	Rev D1
	Date: Monday, June 09, 2025	Sheet 4 of 11	

DC-DC & SBC

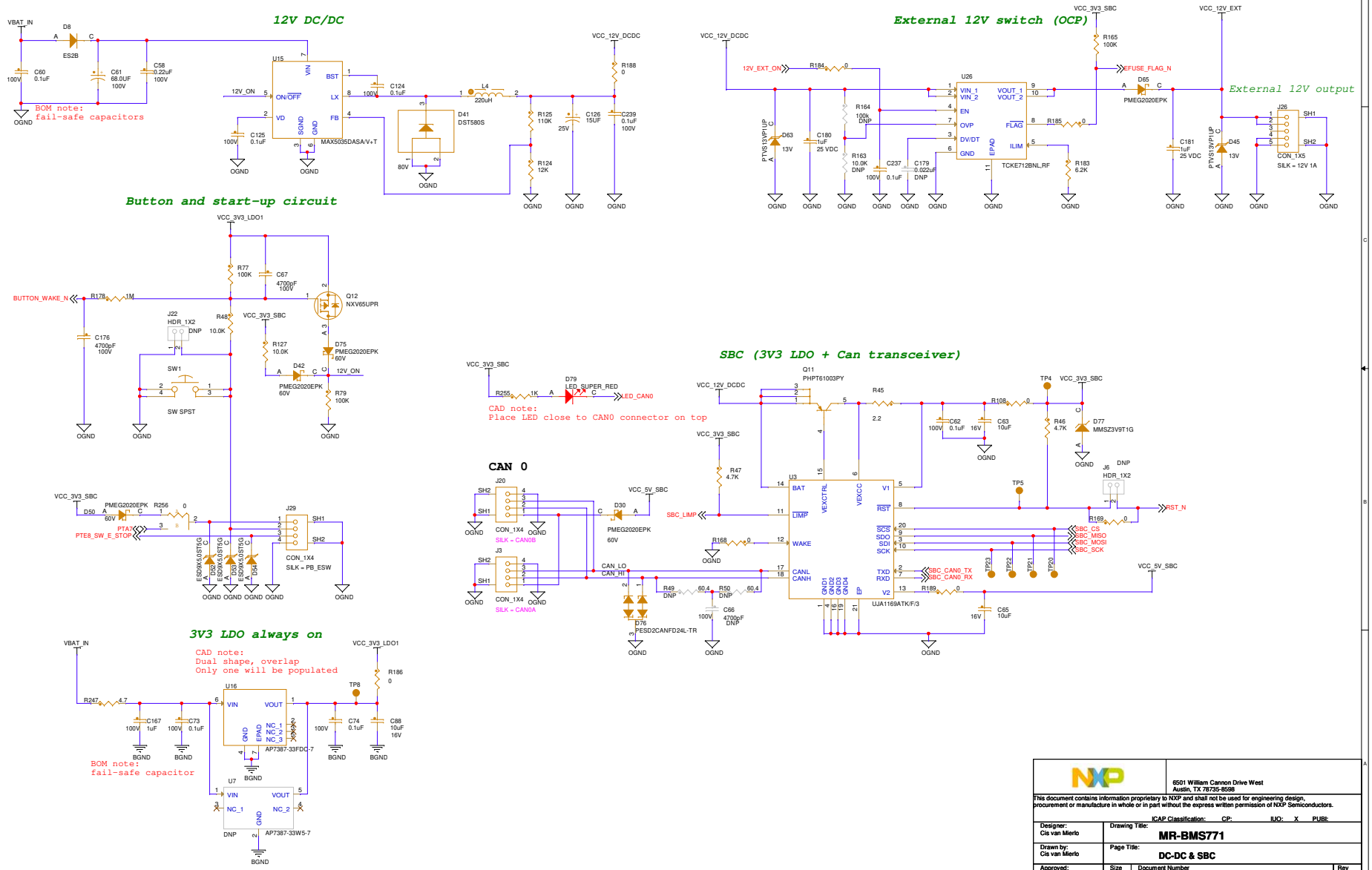

6501 William Cannon Drive West
Austin, TX 78735-8598

This document contains information proprietary to NXP and shall not be used for engineering design, procurement or manufacture in whole or in part without the express written permission of NXP Semiconductors.

ICAP Classification: CP: IUO: X PUBL

Designer: Cis van Mierlo	Drawing Title: MR-BMS771	
Drawn by: Cis van Mierlo	Page Title: DC-DC & SBC	
Approved: Cis van Mierlo	Size C	Document Number SCH87597 - SPF87597	Rev D1
	Date: Monday, June 09, 2025	Sheet 5 of 11

SECURE ELEMENT

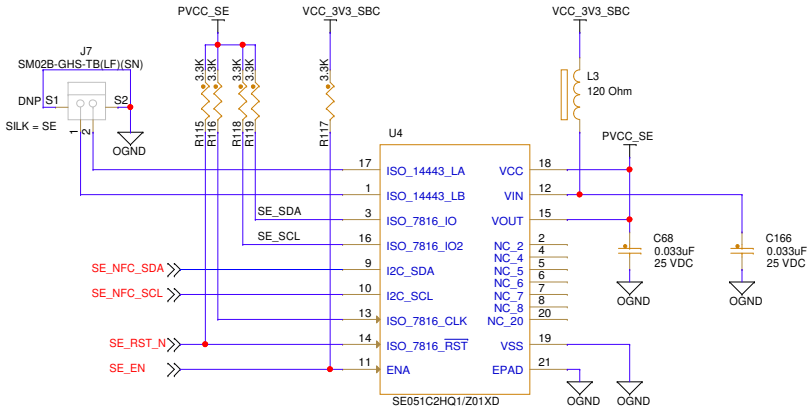

6501 William Cannon Drive West
Austin, TX 78735-8598

This document contains information proprietary to NXP and shall not be used for engineering design, procurement or manufacture in whole or in part without the express written permission of NXP Semiconductors.

ICAP Classification: CP: IUO: X PUBI:

Designer: Cis van Mierlo	Drawing Title: **MR-BMS771**	
Drawn by: Cis van Mierlo	Page Title: **SECURE ELEMENT**	
Approved: Cis van Mierlo	Size B / Document Number SCH87597 - SPF87597	Rev D1
	Date: Monday, June 09, 2025	Sheet 6 of 11

NFC

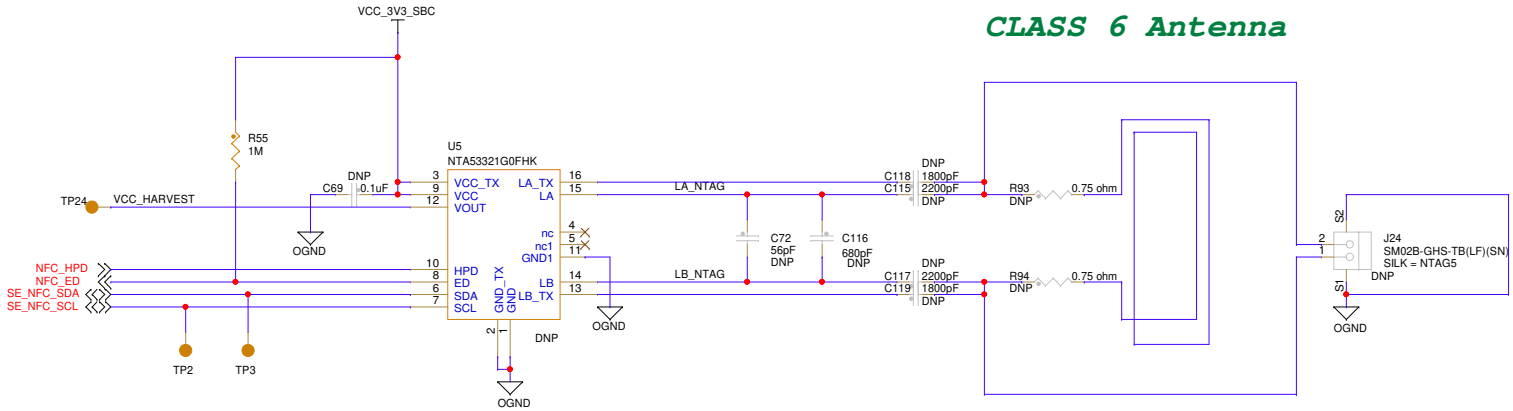

6501 William Cannon Drive West
Austin, TX 78735-8598

This document contains information proprietary to NXP and shall not be used for engineering design, procurement or manufacture in whole or in part without the express written permission of NXP Semiconductors.

ICAP Classification: CP: IUO: X PUBI:

Designer: Cis van Mierlo	Drawing Title: **MR-BMS771**		
Drawn by: Cis van Mierlo	Page Title: **NFC**		
Approved: Cis van Mierlo	Size B	Document Number SCH87597 - SPF87597	Rev D1
	Date: Monday, June 09, 2025	Sheet 7 of 11	

SWITCH

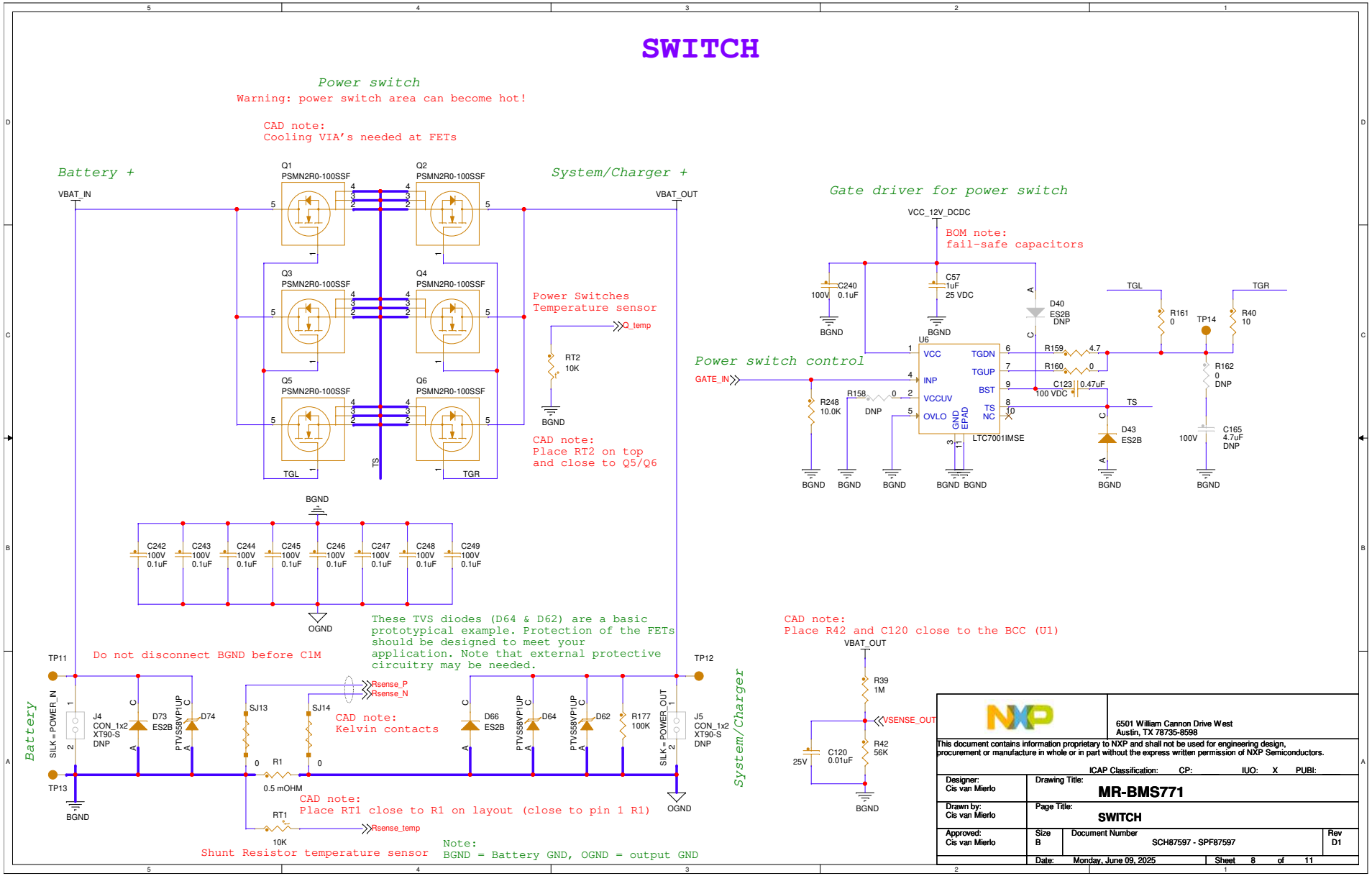
Power switch
Warning: power switch area can become hot!
CAD note:
Cooling VIA's needed at FETs
Battery +
System/Charger +
VBAT_IN
VBAT_OUT
Q1 PSMN2R0-100SSF
Q2 PSMN2R0-100SSF
Q3 PSMN2R0-100SSF
Q4 PSMN2R0-100SSF
Q5 PSMN2R0-100SSF
Q6 PSMN2R0-100SSF
TGL
TGR
Power Switches
Temperature sensor
Q_temp
RT2
10K
BGND
CAD note:
Place RT2 on top
and close to Q5/Q6
C242 100V 0.1uF
C243 100V 0.1uF
C244 100V 0.1uF
C245 100V 0.1uF
C246 100V 0.1uF
C247 100V 0.1uF
C248 100V 0.1uF
C249 100V 0.1uF
OGND
These TVS diodes (D64 & D62) are a basic
prototypical example. Protection of the FETs
should be designed to meet your
application. Note that external protective
circuitry may be needed.
Do not disconnect BGND before C1M
TP11
TP12
TP13
Battery
System/Charger
SILK = POWER_IN
J4 CON_1x2 XT90-S DNP
D73 ES2B
D74 PTVS58VP1UP
SJ13
SJ14
Rsense_P
Rsense_N
CAD note:
Kelvin contacts
R1
0.5 mOHM
D66 ES2B
D64 PTVS58VP1UP
D62 PTVS58VP1UP
R177 100K
SILK = POWER_OUT
J5 CON_1x2 XT90-S DNP
RT1
10K
Rsense_temp
Shunt Resistor temperature sensor
CAD note:
Place RT1 close to R1 on layout (close to pin 1 R1)
Note:
BGND = Battery GND, OGND = output GND
Gate driver for power switch
VCC_12V_DCDC
BOM note:
fail-safe capacitors
C240 100V 0.1uF
C57 1uF 25 VDC
D40 ES2B DNP
Power switch control
GATE_IN
U6
VCC
INP
VCCUV
OVLO
TGDN
TGUP
BST
TS
NC
GND EPAD
LTC7001IMSE
R248 10.0K
R158 0 DNP
R159 4.7
R160 0
C123 0.47uF 100 VDC
R161 0
TP14
R40 10
R162 0 DNP
C165 4.7uF DNP
D43 ES2B
CAD note:
Place R42 and C120 close to the BCC (U1)
VBAT_OUT
R39 1M
VSENSE_OUT
R42 56K
C120 0.01uF 25V
6501 William Cannon Drive West
Austin, TX 78735-8598
This document contains information proprietary to NXP and shall not be used for engineering design, procurement or manufacture in whole or in part without the express written permission of NXP Semiconductors.
ICAP Classification: CP: IUO: X PUBI:
Designer: Cis van Mierlo
Drawn by: Cis van Mierlo
Approved: Cis van Mierlo
Drawing Title: MR-BMS771
Page Title: SWITCH
Size B
Document Number SCH87597 - SPF87597
Rev D1
Date: Monday, June 09, 2025
Sheet 8 of 11

OVERCURRENT

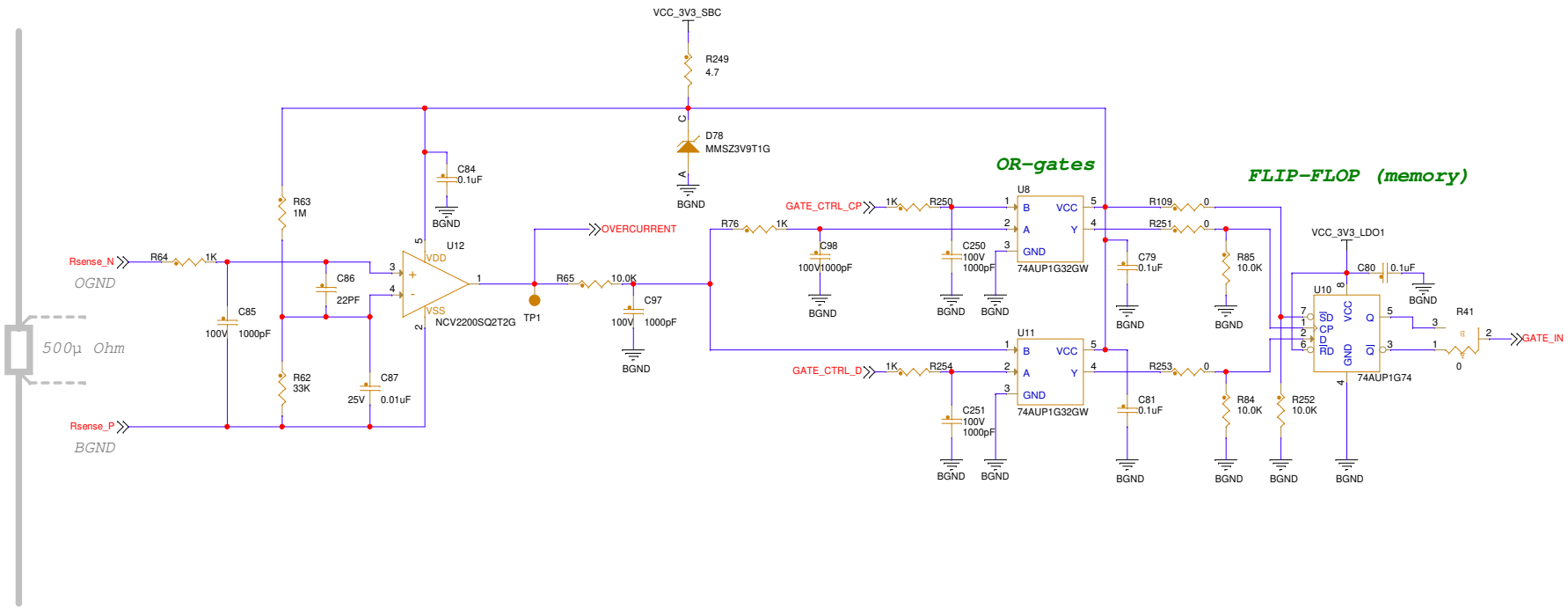

NXP

6501 William Cannon Drive West
Austin, TX 78735-8598

This document contains information proprietary to NXP and shall not be used for engineering design, procurement or manufacture in whole or in part without the express written permission of NXP Semiconductors.

ICAP Classification: CP: IUO: X PUBI:

Designer: Cis van Mierlo	Drawing Title: **MR-BMS771**		
Drawn by: Cis van Mierlo	Page Title: **OVERCURRENT**		
Approved: Cis van Mierlo	Size B	Document Number SCH87597 - SPF87597	Rev D1
	Date: Monday, June 09, 2025	Sheet 9 of 11	

EXTRA CAN

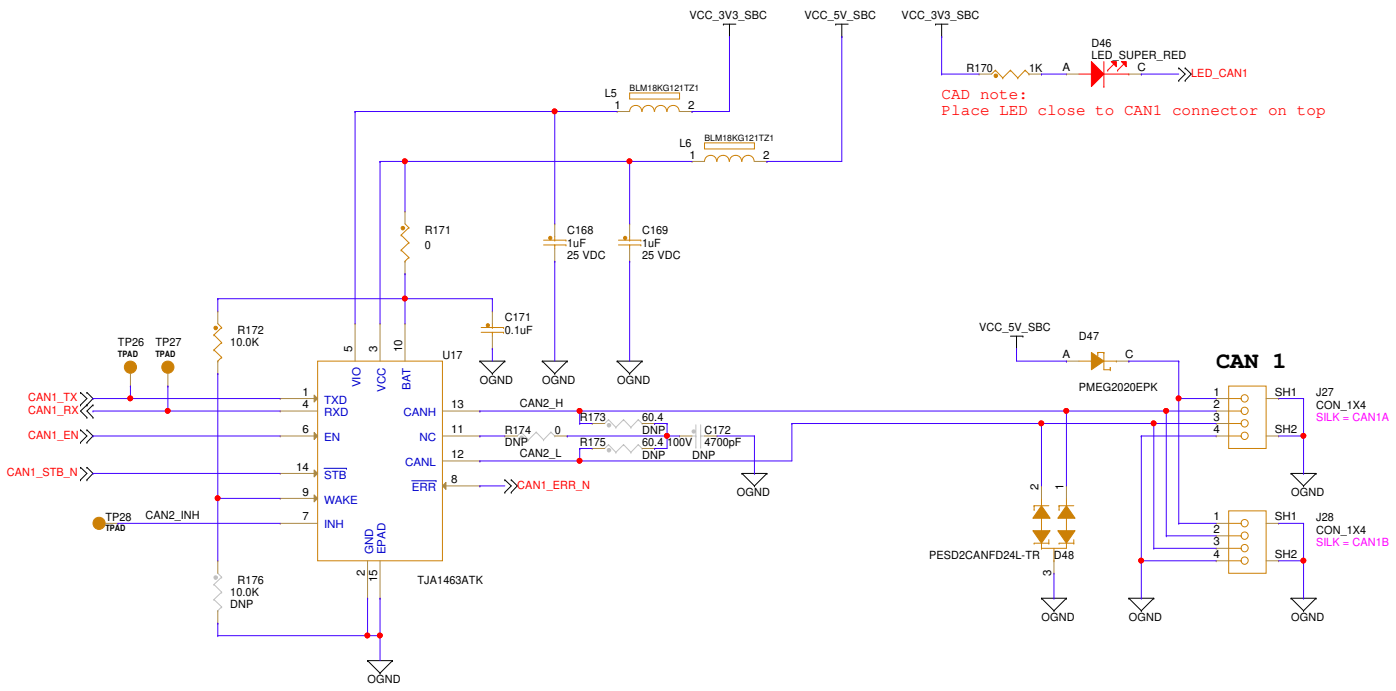

6501 William Cannon Drive West
Austin, TX 78735-8598

This document contains information proprietary to NXP and shall not be used for engineering design, procurement or manufacture in whole or in part without the express written permission of NXP Semiconductors.

ICAP Classification: CP: IUO: X PUBI:

Designer: Cis van Mierlo	Drawing Title: **MR-BMS771**		
Drawn by: Cis van Mierlo	Page Title: **EXTRA CAN**		
Approved: Cis van Mierlo	Size B	Document Number SCH87597 - SPF87597	Rev D1
	Date: Monday, June 09, 2025	Sheet 10 of 11	

SWITCH MATRIX

7s

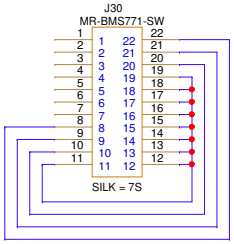

8s

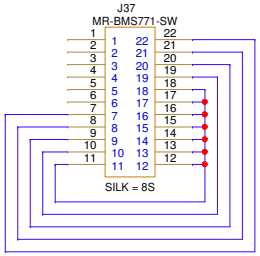

9s

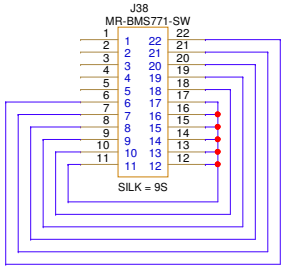

10s

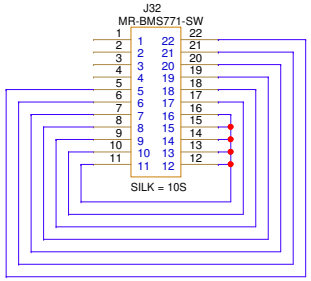

11s

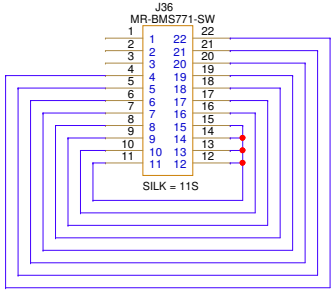

12s

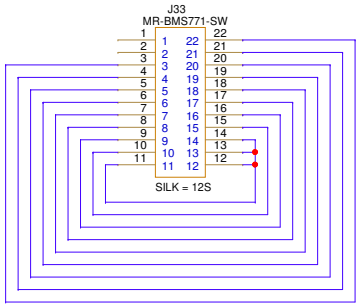

13s

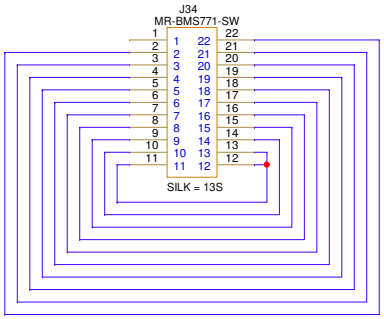

14s

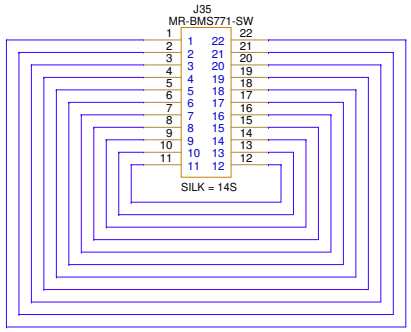

6501 William Cannon Drive West
Austin, TX 78735-8598

This document contains information proprietary to NXP and shall not be used for engineering design, procurement or manufacture in whole or in part without the express written permission of NXP Semiconductors.

ICAP Classification: CP: IUO: X PUBI:

Designer: Cis van Mierlo	Drawing Title: **MR-BMS771**		
Drawn by: Cis van Mierlo	Page Title: **SWITCH MATRIX**		
Approved: Cis van Mierlo	Size B	Document Number SCH87597 - SPF87597	Rev D1
	Date: Monday, June 09, 2025	Sheet 11 of 11	

ERROR: undefinedfilename
OFFENDING COMMAND: d1

STACK: