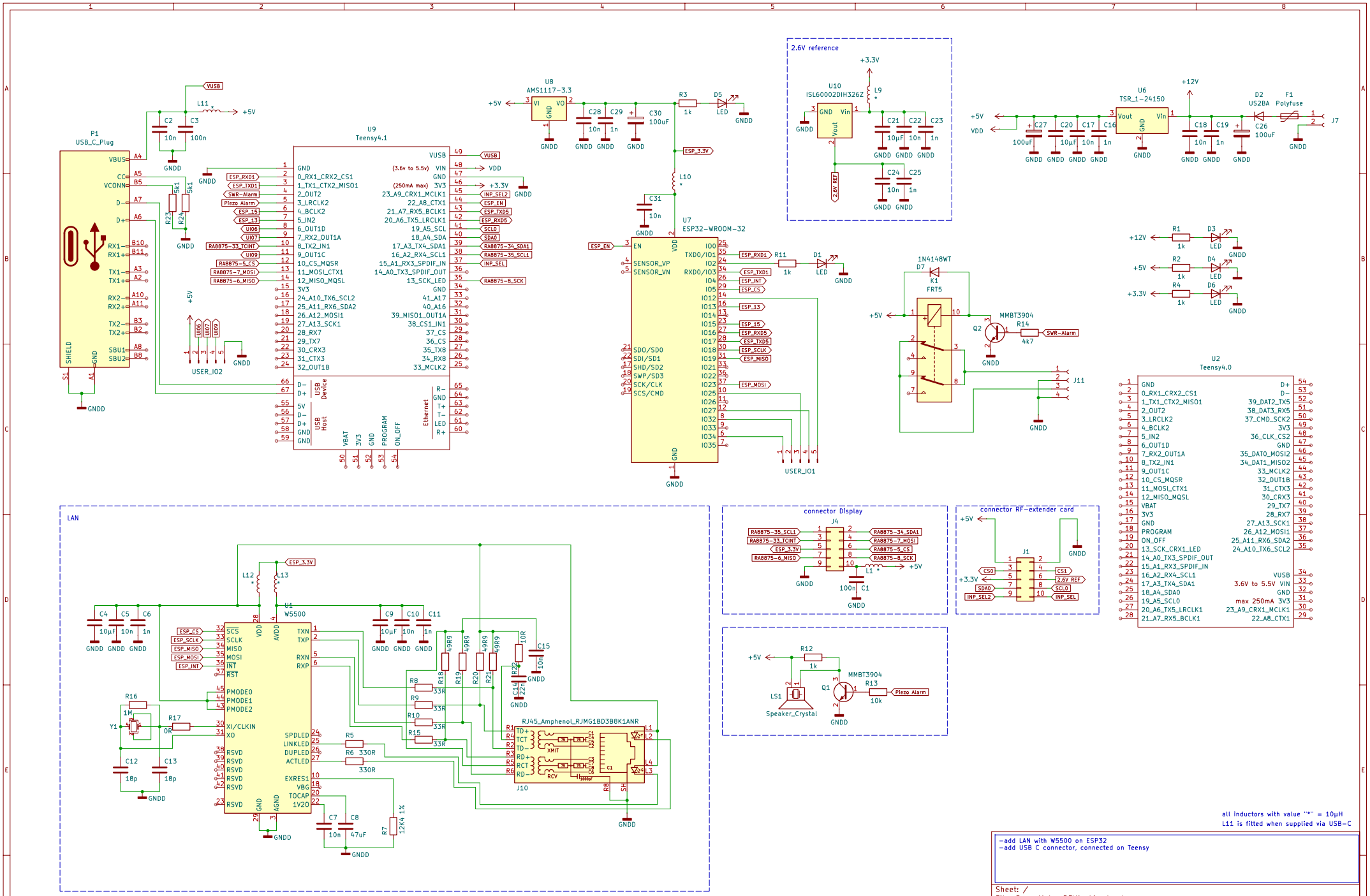
P1
USB_C_Plug
U9
Teensy4.1
U8
AMS1117-3.3
U7
ESP32-WROOM-32
2.6V reference
U10
ISL60002DIH3262
U6
TSR_1-24150
D2
US2BA
F1
Polyfuse
J7
1N4148WT
D7
K1
FRT5
MMBT3904
Q2
R14
4k7
SWR-Alarm
J11
U2
Teensy4.0
LAN
U1
W5500
RJ45_Amphenol_RJMG1BD3B8K1ANR
J10
connector Display
J4
connector RF-extender card
J1
Speaker_Crystal
LS1
Q1
R13
10k
Plezo Alarm
all inductors with value "*" = 10µH
L11 is fitted when supplied via USB-C
-add LAN with W5500 on ESP32
-add USB C connector, connected on Teensy
Sheet: /
File: PowerMeter_REV4n.kicad_sch
Title: Teensy RF Powermeter
Size: A3
Date: 2025-01-20
Rev: 4.1
KiCad E.D.A. 8.0.8
Id: 1/1