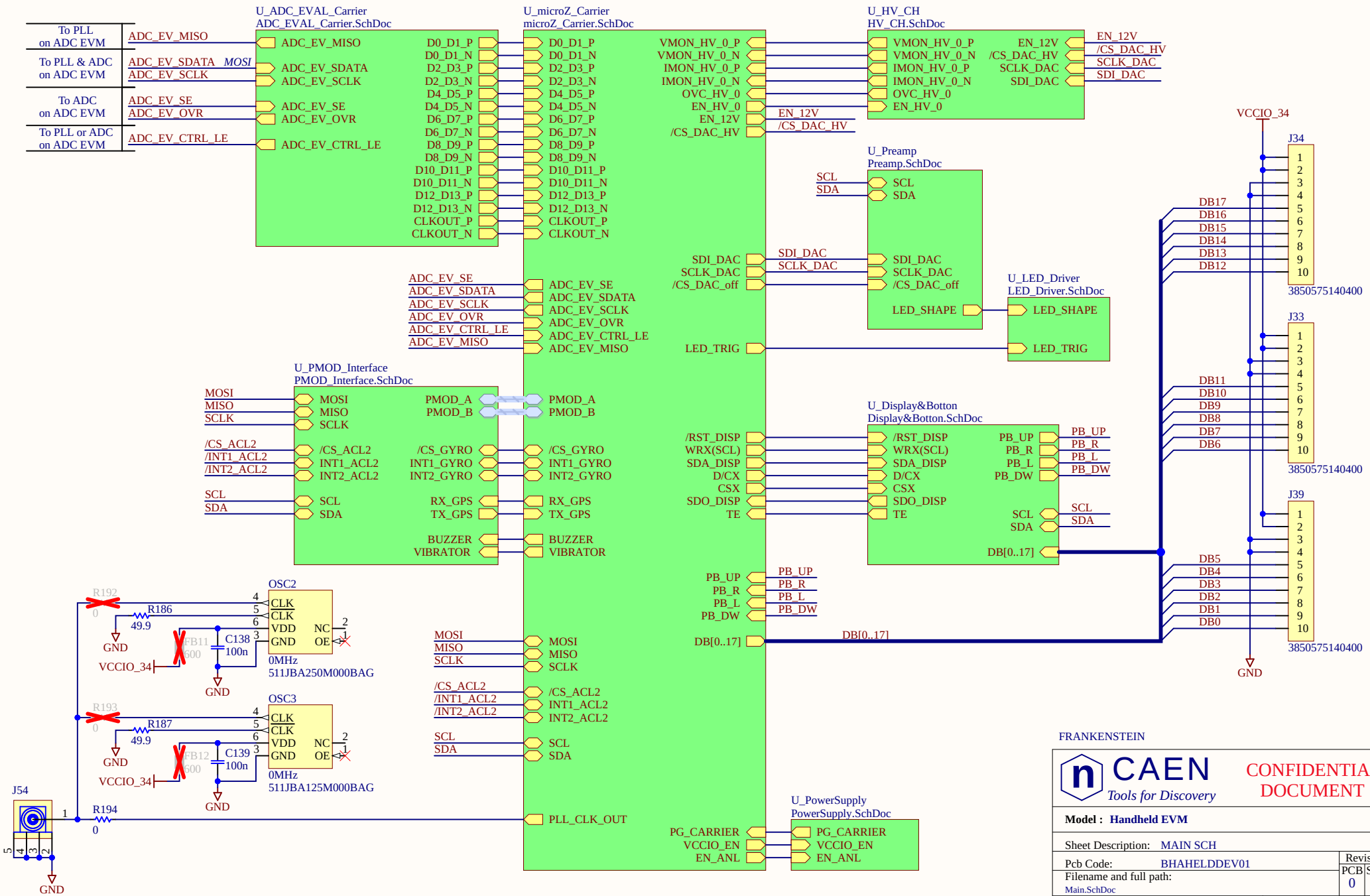
U_ADC_EVAL_Carrier
ADC_EVAL_Carrier.SchDoc
U_microZ_Carrier
microZ_Carrier.SchDoc
U_HV_CH
HV_CH.SchDoc
U_Preamp
Preamp.SchDoc
U_LED_Driver
LED_Driver.SchDoc
U_PMOD_Interface
PMOD_Interface.SchDoc
U_Display&Botton
Display&Botton.SchDoc
U_PowerSupply
PowerSupply.SchDoc
To PLL on ADC EVM
To PLL & ADC on ADC EVM
To ADC on ADC EVM
To PLL or ADC on ADC EVM
ADC_EV_MISO
ADC_EV_SDATA MOSI
ADC_EV_SCLK
ADC_EV_SE
ADC_EV_OVR
ADC_EV_CTRL_LE
D0_D1_P
D0_D1_N
D2_D3_P
D2_D3_N
D4_D5_P
D4_D5_N
D6_D7_P
D6_D7_N
D8_D9_P
D8_D9_N
D10_D11_P
D10_D11_N
D12_D13_P
D12_D13_N
CLKOUT_P
CLKOUT_N
VMON_HV_0_P
VMON_HV_0_N
IMON_HV_0_P
IMON_HV_0_N
OVC_HV_0
EN_HV_0
EN_12V
/CS_DAC_HV
/CS_DAC_HV
SCLK_DAC
SDI_DAC
SCL
SDA
SDI_DAC
SCLK_DAC
/CS_DAC_off
LED_SHAPE
LED_TRIG
MOSI
MISO
SCLK
/CS_ACL2
/INT1_ACL2
/INT2_ACL2
INT1_ACL2
INT2_ACL2
PMOD_A
PMOD_B
/CS_GYRO
INT1_GYRO
INT2_GYRO
RX_GPS
TX_GPS
BUZZER
VIBRATOR
/RST_DISP
WRX(SCL)
SDA_DISP
D/CX
CSX
SDO_DISP
TE
PB_UP
PB_R
PB_L
PB_DW
DB[0..17]
PLL_CLK_OUT
PG_CARRIER
VCCIO_EN
EN_ANL
VCCIO_34
J34
J33
J39
3850575140400
DB17
DB16
DB15
DB14
DB13
DB12
DB11
DB10
DB9
DB8
DB7
DB6
DB5
DB4
DB3
DB2
DB1
DB0
GND
OSC2
OSC3
CLK
VDD
NC
OE
0MHz
511JBA250M000BAG
511JBA125M000BAG
R192
R193
R186
R187
R194
49.9
0
C138
C139
100n
FB11
FB12
600
J54
FRANKENSTEIN
CAEN
Tools for Discovery
CONFIDENTIAL DOCUMENT
Model : Handheld EVM
Sheet Description: MAIN SCH
Pcb Code: BHAHELDDEV01
Filename and full path:
Main.SchDoc
Revision
PCB 0
SCH 0
Date: 28/01/2025 09:40:03
Sheet 1 of 11
Reproduction, transfer, distribution of part or all of the contents in this document in any form without prior written permission of CAEN is prohibited

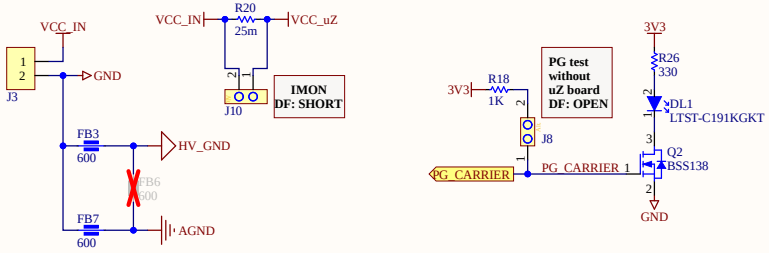

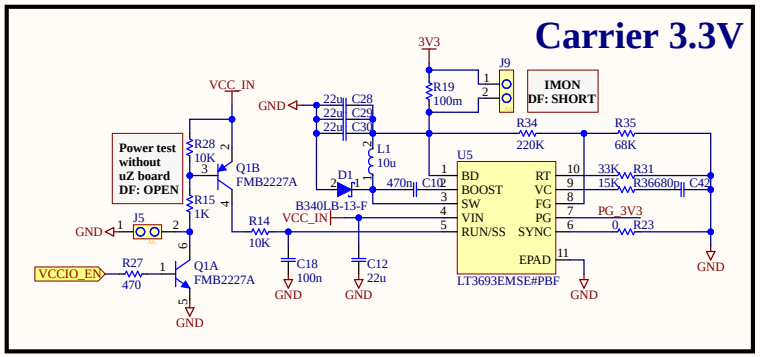

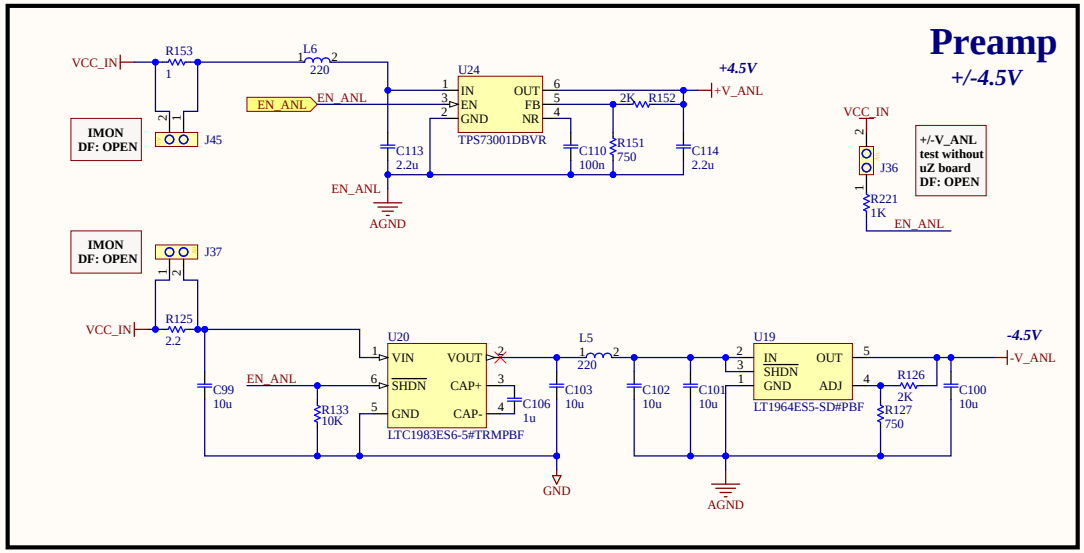

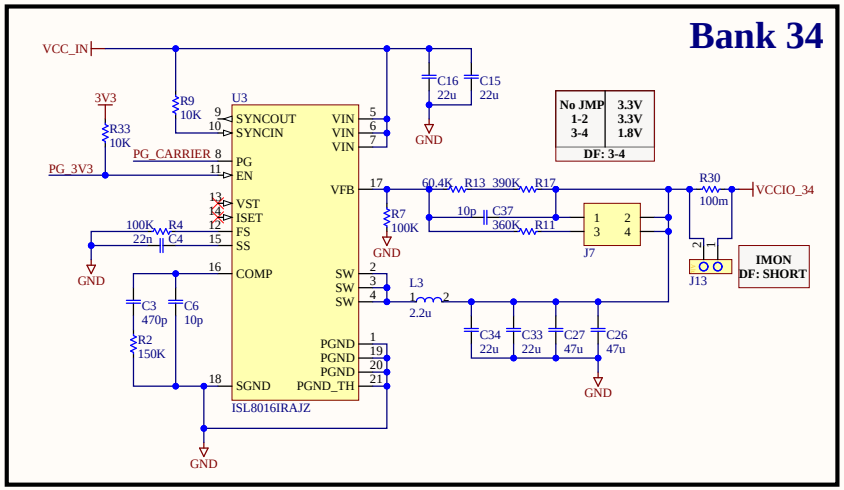

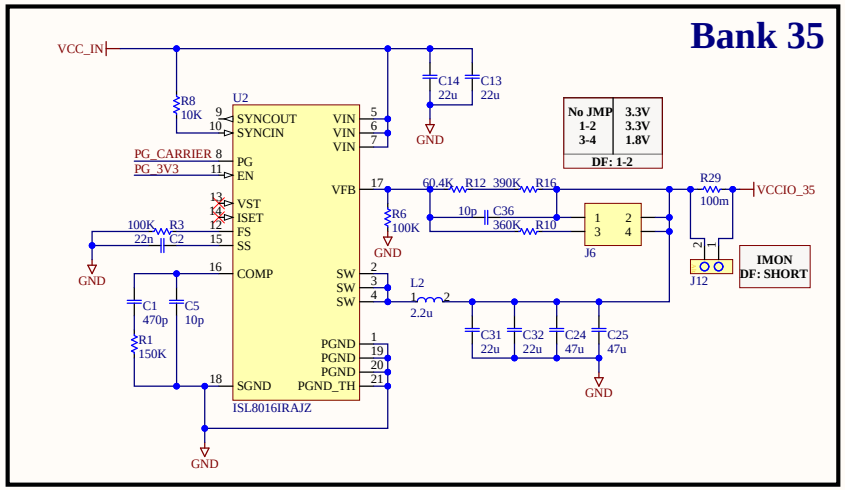

FRANKENSTEIN

CAEN *Tools for Discovery*

CONFIDENTIAL DOCUMENT

Model : Handheld EVM

Sheet Description: Power Supply

Pcb Code: BHAHELDDEV01

Filename and full path: PowerSupply.SchDoc

Revision PCB 0 SCH 0

Date: 28/01/2025 09:40:03 Sheet 2 of 11

Reproduction, transfer, distribution of part or all of the contents in this document in any form without prior written permission of CAEN is prohibited

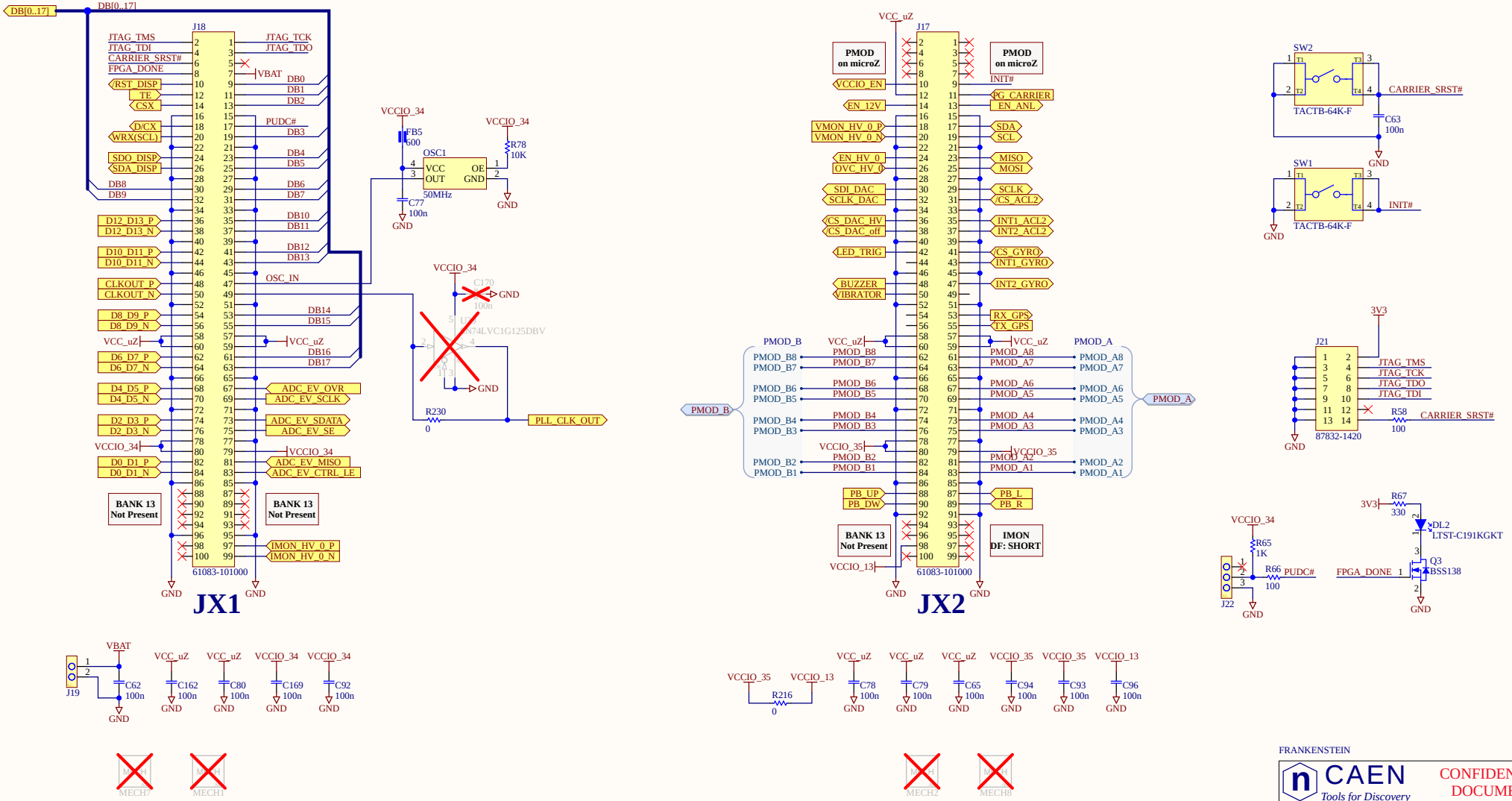

FRANKENSTEIN

CAEN Tools for Discovery

CONFIDENTIAL DOCUMENT

Model : Handheld EVM

Sheet Description: Micro Z carrier

Pcb Code: BHAHELDDEV01

Filename and full path: microZ_Carrier.SchDoc

Revision PCB 0 SCH 0

Date: 28/01/2025 09:40:03 Sheet 3 of 11

Reproduction, transfer, distribution of part or all of the contents in this document in any form without prior written permission of CAEN is prohibited

Connect to ADS4149EVM

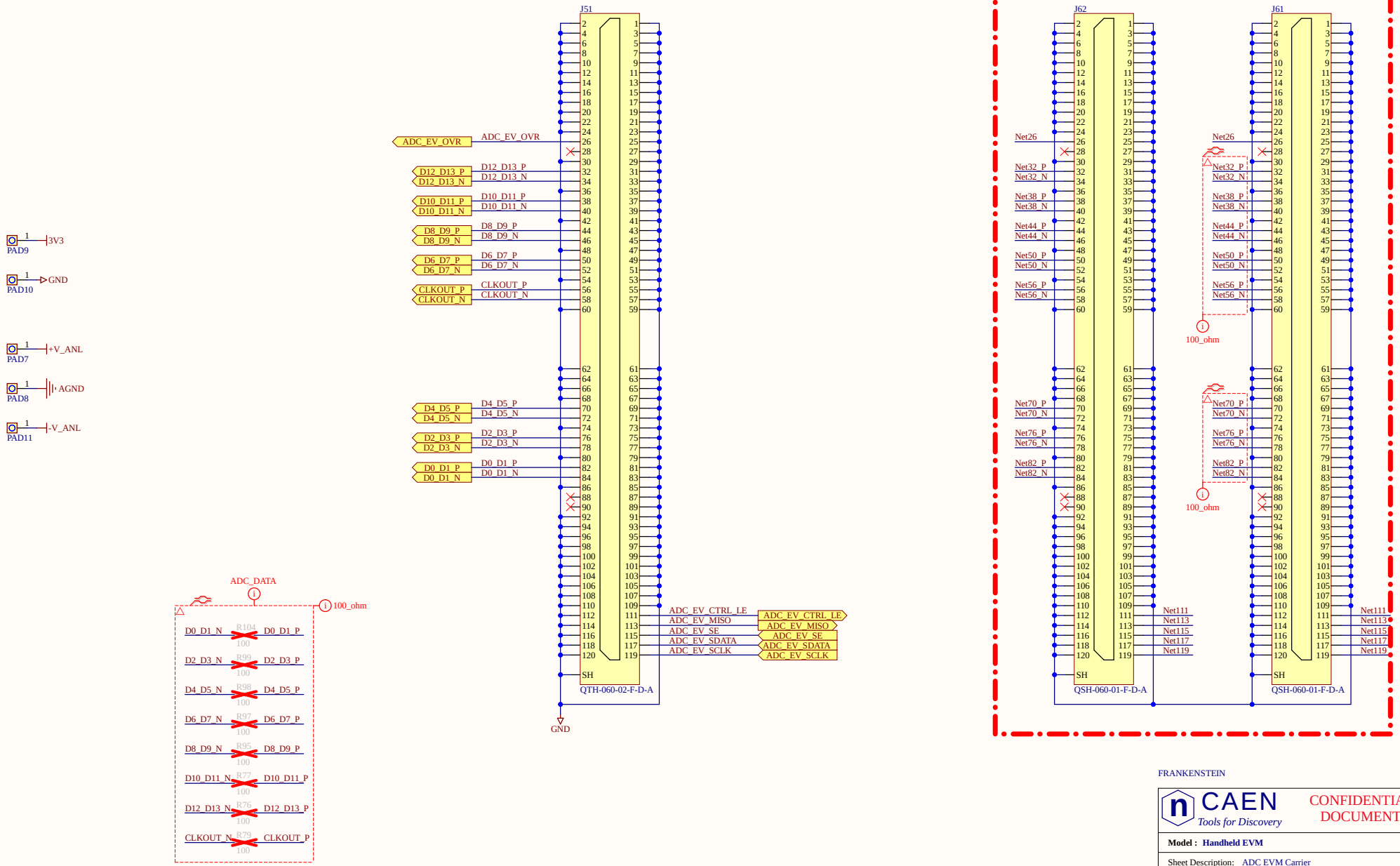

FRANKENSTEIN

CAEN *Tools for Discovery*

CONFIDENTIAL DOCUMENT

Model : Handheld EVM

Sheet Description: ADC EVM Carrier

Pcb Code: BHAHELDDEV01

Filename and full path: ADC_EVAL_Carrier.SchDoc

Revision PCB 0 SCH 0

Date: 28/01/2025 09:40:03 Sheet 4 of 11

Reproduction, transfer, distribution of part or all of the contents in this document in any form without prior written permission of CAEN is prohibited

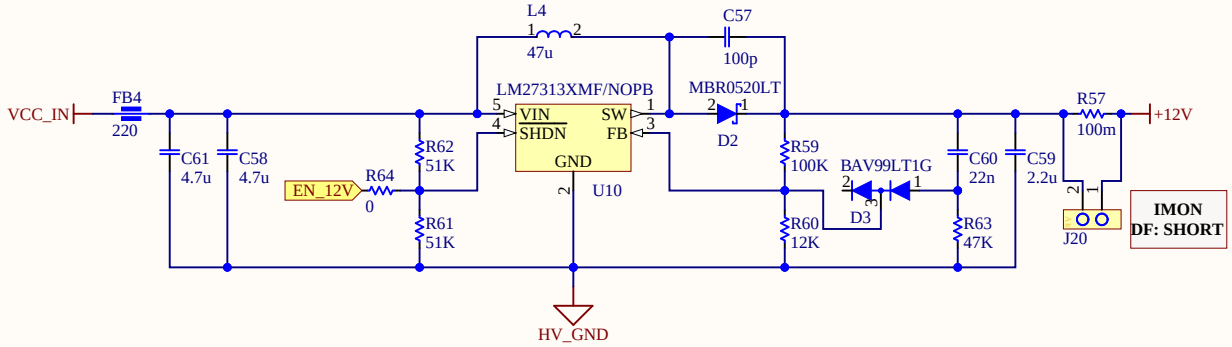

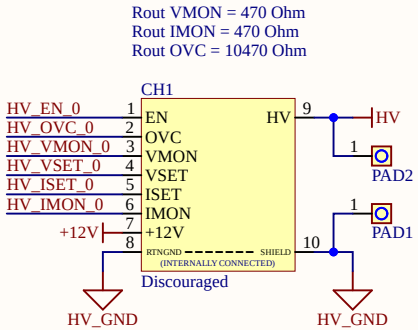

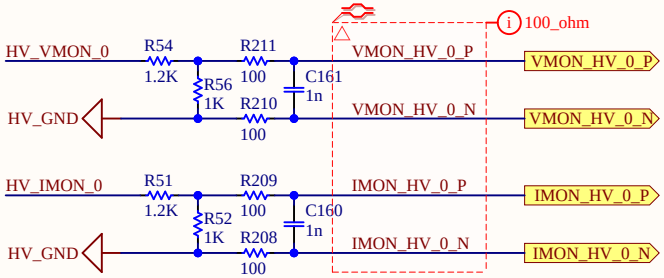

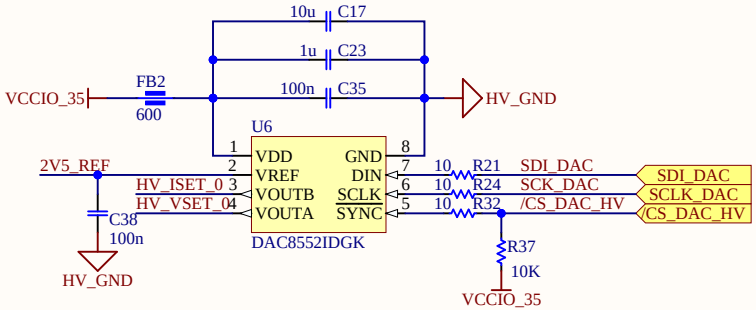

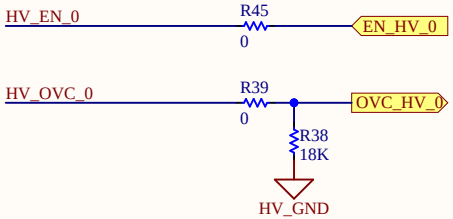

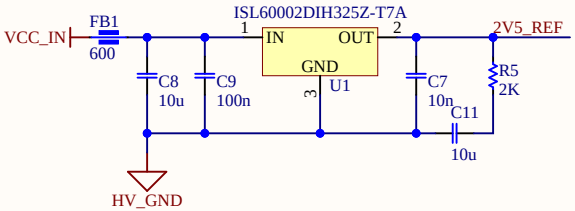

FRANKENSTEIN

CAEN
Tools for Discovery

CONFIDENTIAL DOCUMENT

Model : Handheld EVM

Sheet Description: HV Channel

Pcb Code: BHAHELDDEV01

Filename and full path:
HV_CH.SchDoc

Revision	
PCB	SCH
0	0

Date: 28/01/2025 09:40:03 Sheet 5 of 11

Reproduction, transfer, distribution of part or all of the contents in this document in any form without prior written permission of CAEN is prohibited

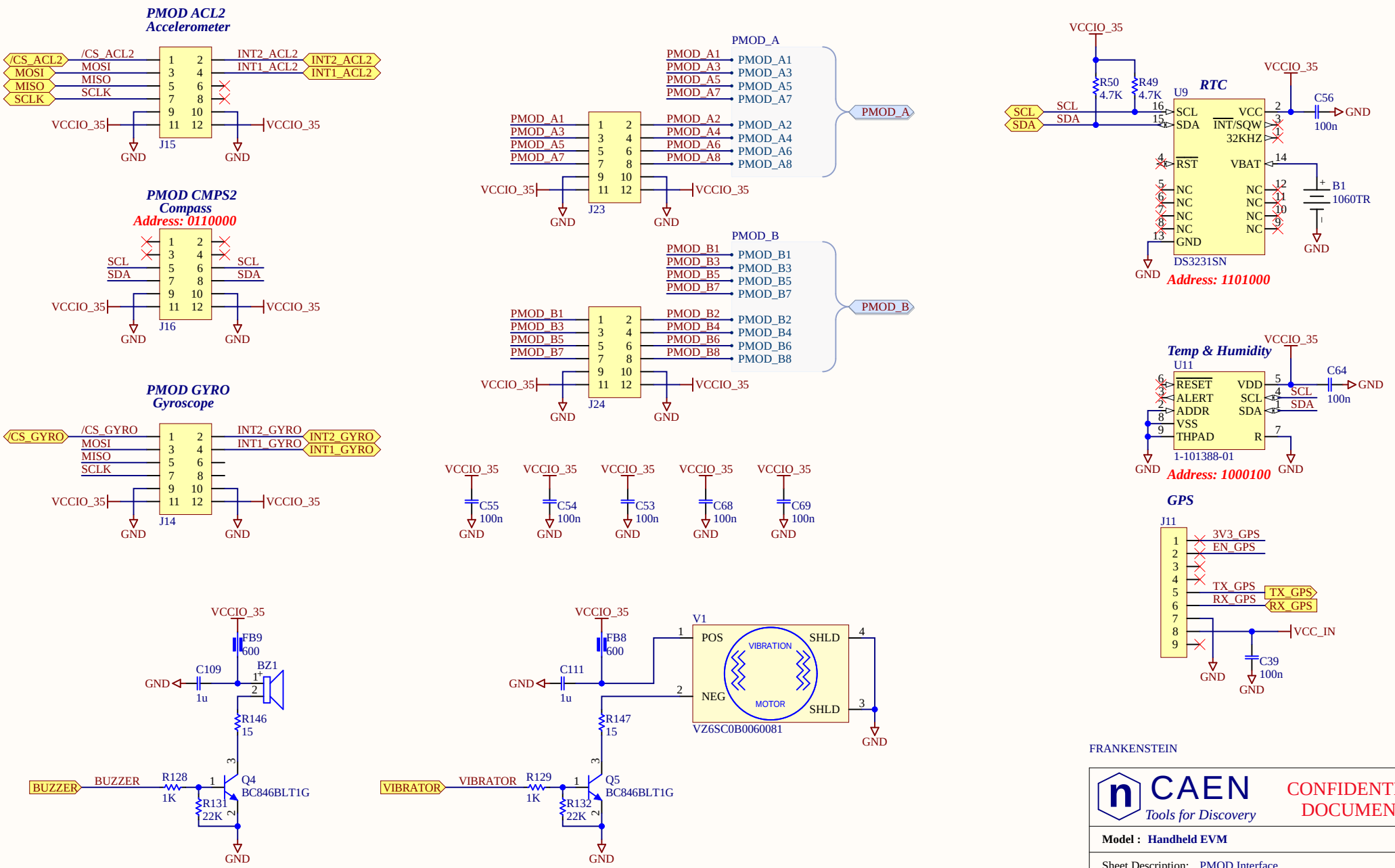
PMOD ACL2
Accelerometer
/CS_ACL2
MOSI
MISO
SCLK
INT2_ACL2
INT1_ACL2
VCCIO_35
GND
J15
PMOD CMPS2
Compass
Address: 0110000
SCL
SDA
J16
PMOD GYRO
Gyroscope
/CS_GYRO
INT2_GYRO
INT1_GYRO
J14
PMOD_A
PMOD_B
J23
J24
VCCIO_35
C55
C54
C53
C68
C69
100n
RTC
U9
DS3231SN
Address: 1101000
C56
B1
1060TR
R50
R49
4.7K
Temp & Humidity
U11
1-101388-01
Address: 1000100
C64
GPS
J11
3V3_GPS
EN_GPS
TX_GPS
RX_GPS
VCC_IN
C39
BUZZER
FB9
600
C109
1u
BZ1
R146
15
R128
1K
R131
22K
Q4
BC846BLT1G
VIBRATOR
FB8
C111
R147
R129
R132
Q5
V1
POS
NEG
SHLD
VIBRATION
MOTOR
VZ6SC0B0060081
FRANKENSTEIN
CAEN
Tools for Discovery
CONFIDENTIAL DOCUMENT
Model : Handheld EVM
Sheet Description: PMOD Interface
Pcb Code: BHAHELDDEV01
Filename and full path:
PMOD_Interface.SchDoc
Revision
PCB 0
SCH 0
Date: 28/01/2025 09:40:03
Sheet 6 of 11
Reproduction, transfer, distribution of part or all of the contents in this document in any form without prior written permission of CAEN is prohibited

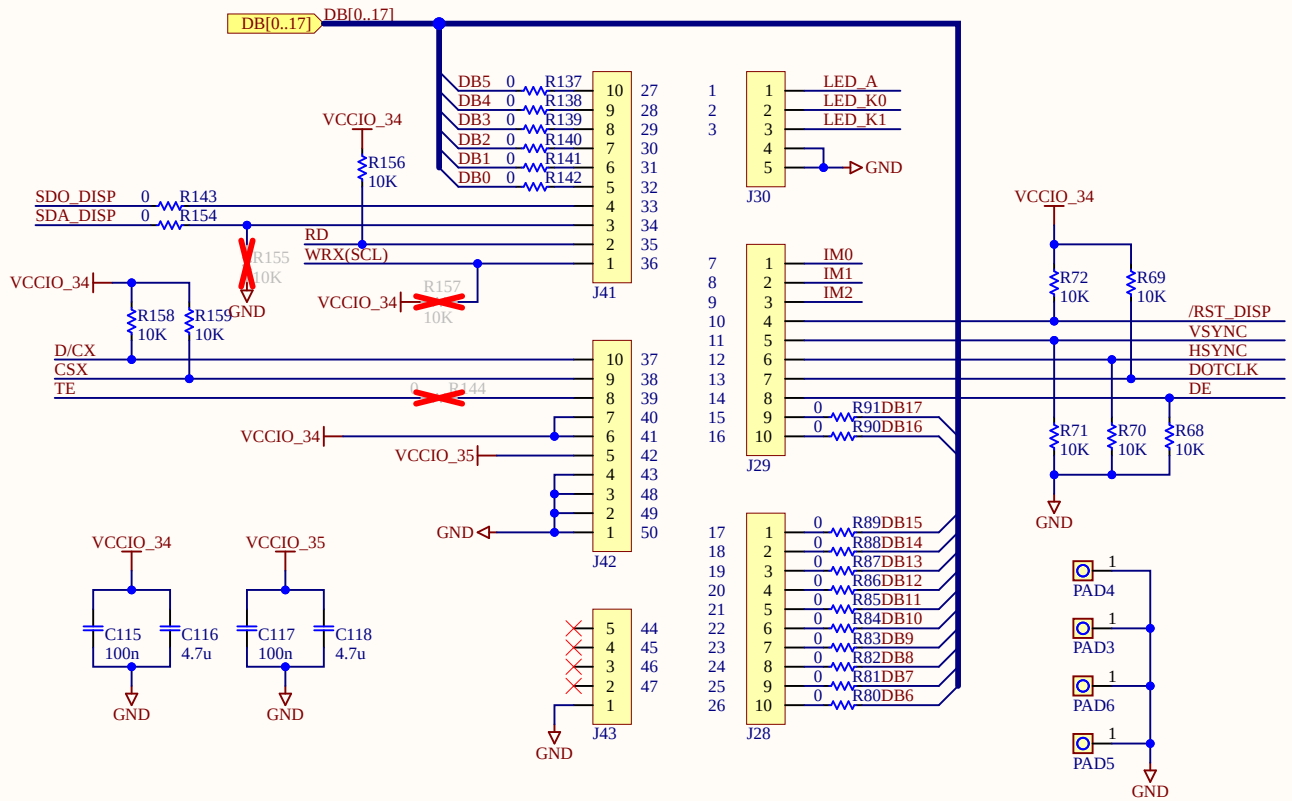

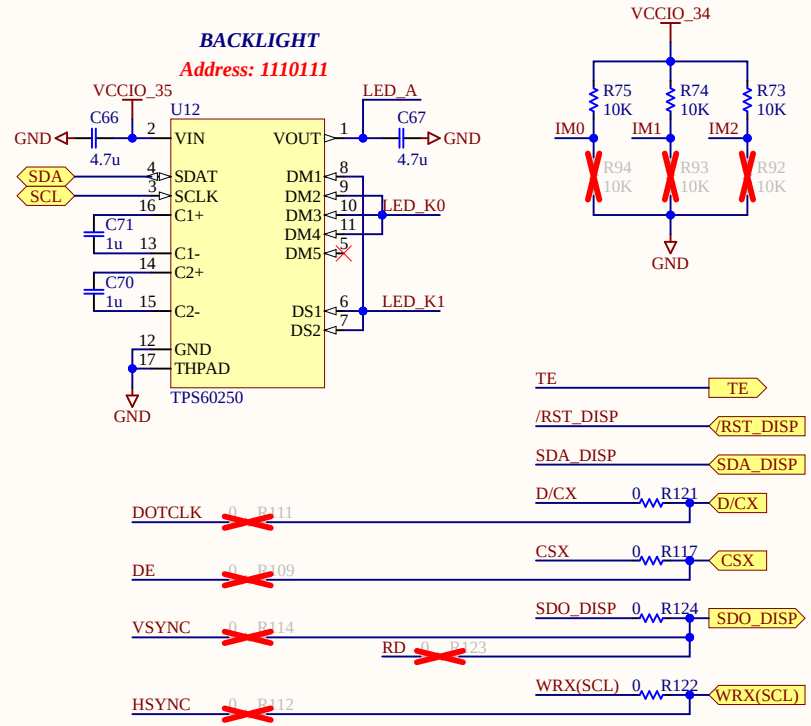

RGB: montare R111, R109, R114, R112
8080 Parallel: montare R121, R117, R123, R122
SPI: montare R121, R117, R124, R122

SPI	8080 Parallel	RGB
xxx	DB[0:17]	DB[0:17]
SDA	xxx	xxx
SDO	RD	HSYNC
SCL	WRX	DOTCLK
CSX	CSX	VSYNC
D/CX	D/CX	DE
RESET	RESET	RESET

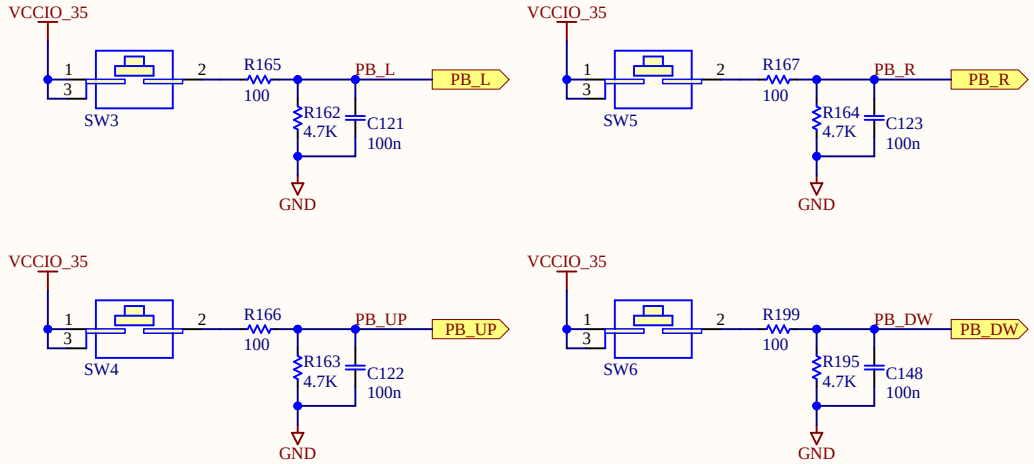

FRANKENSTEIN

CAEN Tools for Discovery

CONFIDENTIAL DOCUMENT

Model : Handheld EVM

Sheet Description: Human Interface (Display & Push botton)

Pcb Code: BHAHELDDEV01

Filename and full path: Display&Botton.SchDoc

Revision PCB 0 SCH 0

Date: 28/01/2025 09:40:03 Sheet 7 of 11

Reproduction, transfer, distribution of part or all of the contents in this document in any form without prior written permission of CAEN is prohibited

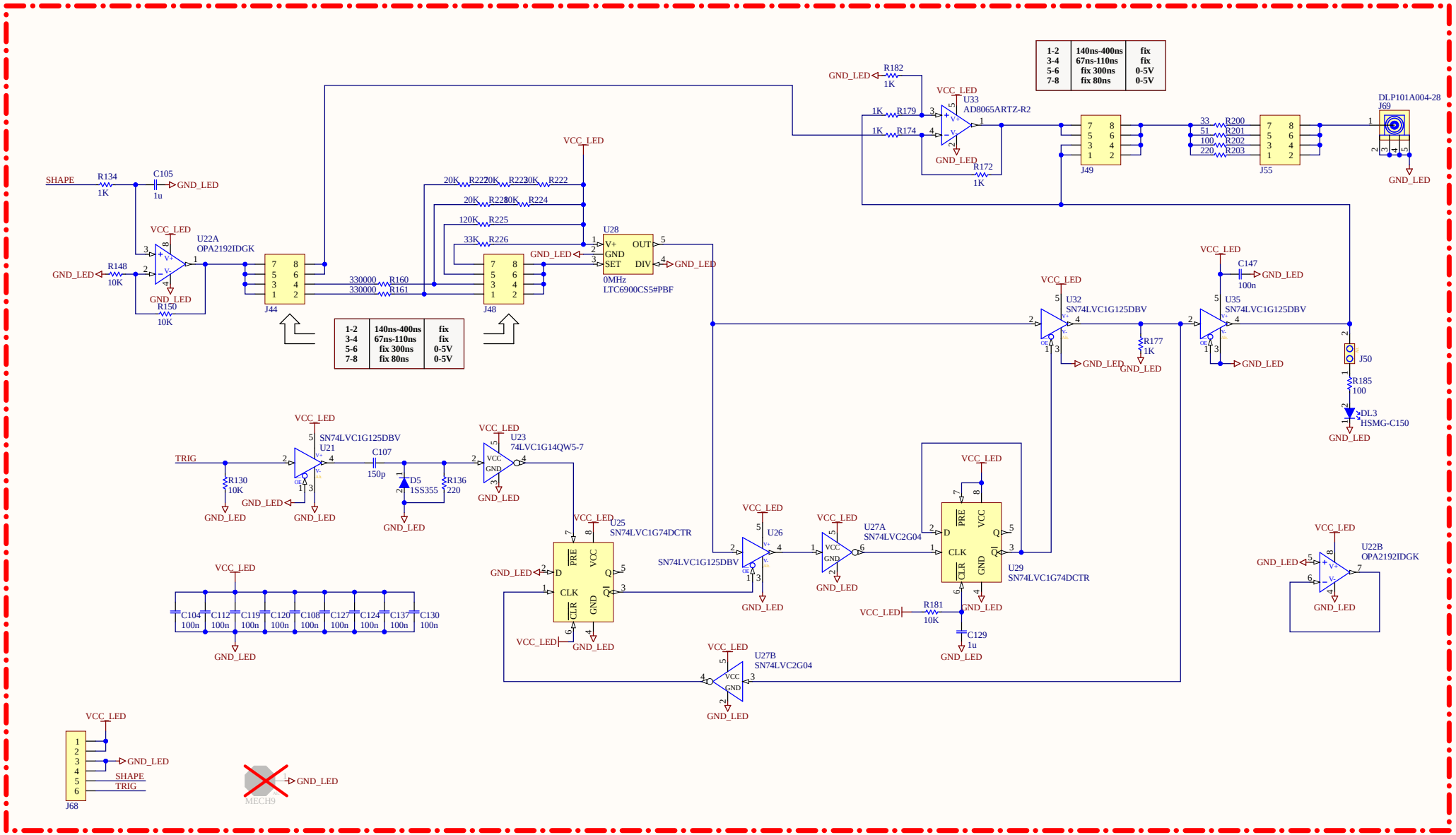

FRANKENSTEIN

CAEN Tools for Discovery

CONFIDENTIAL DOCUMENT

Model : Handheld EVM

Sheet Description: LED Driver

Pcb Code: BHAHELDDEV01

Filename and full path: LED_Driver.SchDoc

Revision PCB 0 SCH 0

Date: 28/01/2025 09:40:03 Sheet 8 of 11

Reproduction, transfer, distribution of part or all of the contents in this document in any form without prior written permission of CAEN is prohibited

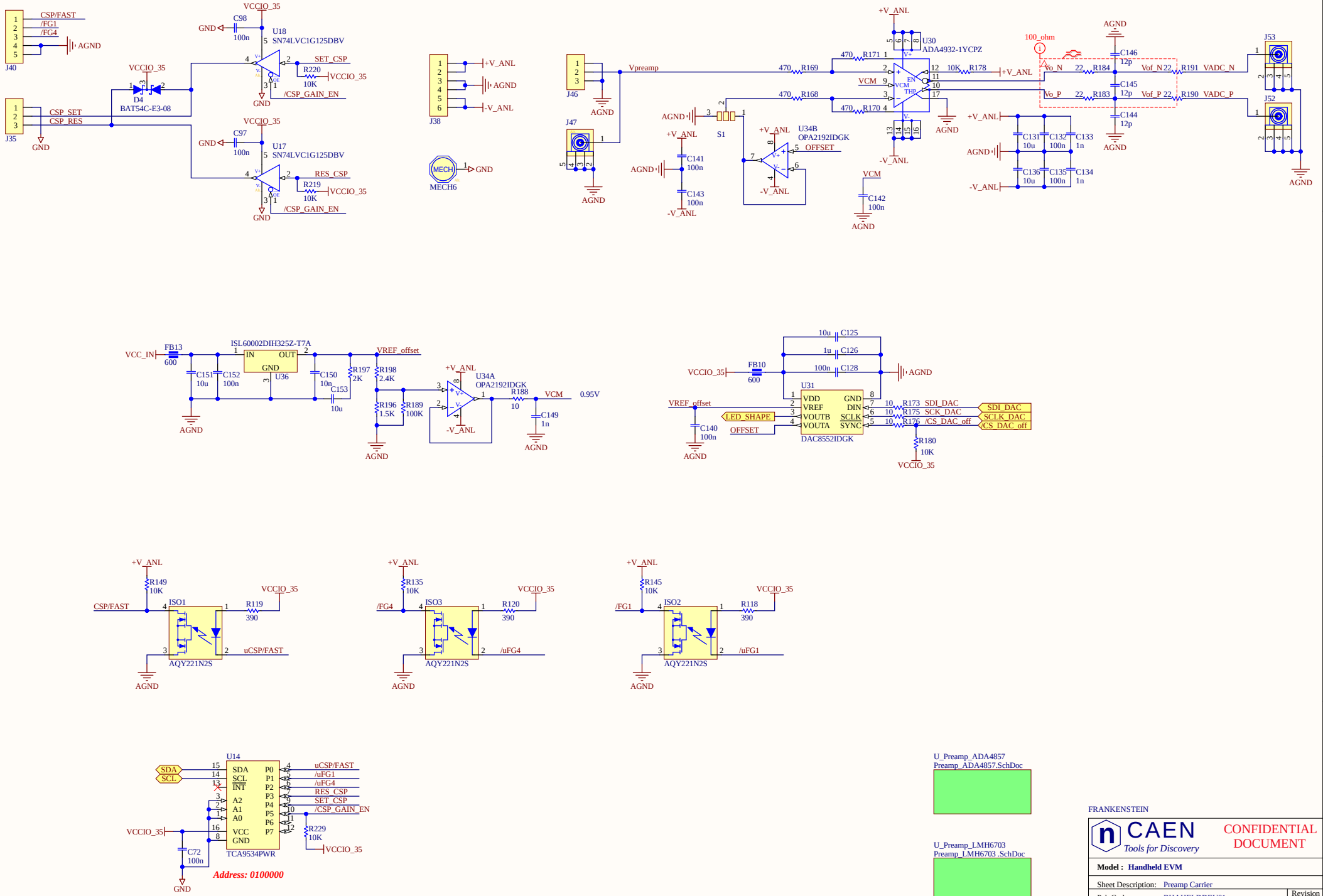

FRANKENSTEIN

CAEN Tools for Discovery

CONFIDENTIAL DOCUMENT

Model : Handheld EVM

Sheet Description: Preamp Carrier

Pcb Code: BHAHELDDEV01

Filename and full path: Preamp.SchDoc

Revision PCB 0 SCH 0

Date: 28/01/2025 09:40:03 Sheet 9 of 11

Reproduction, transfer, distribution of part or all of the contents in this document in any form without prior written permission of CAEN is prohibited

Preamp_1

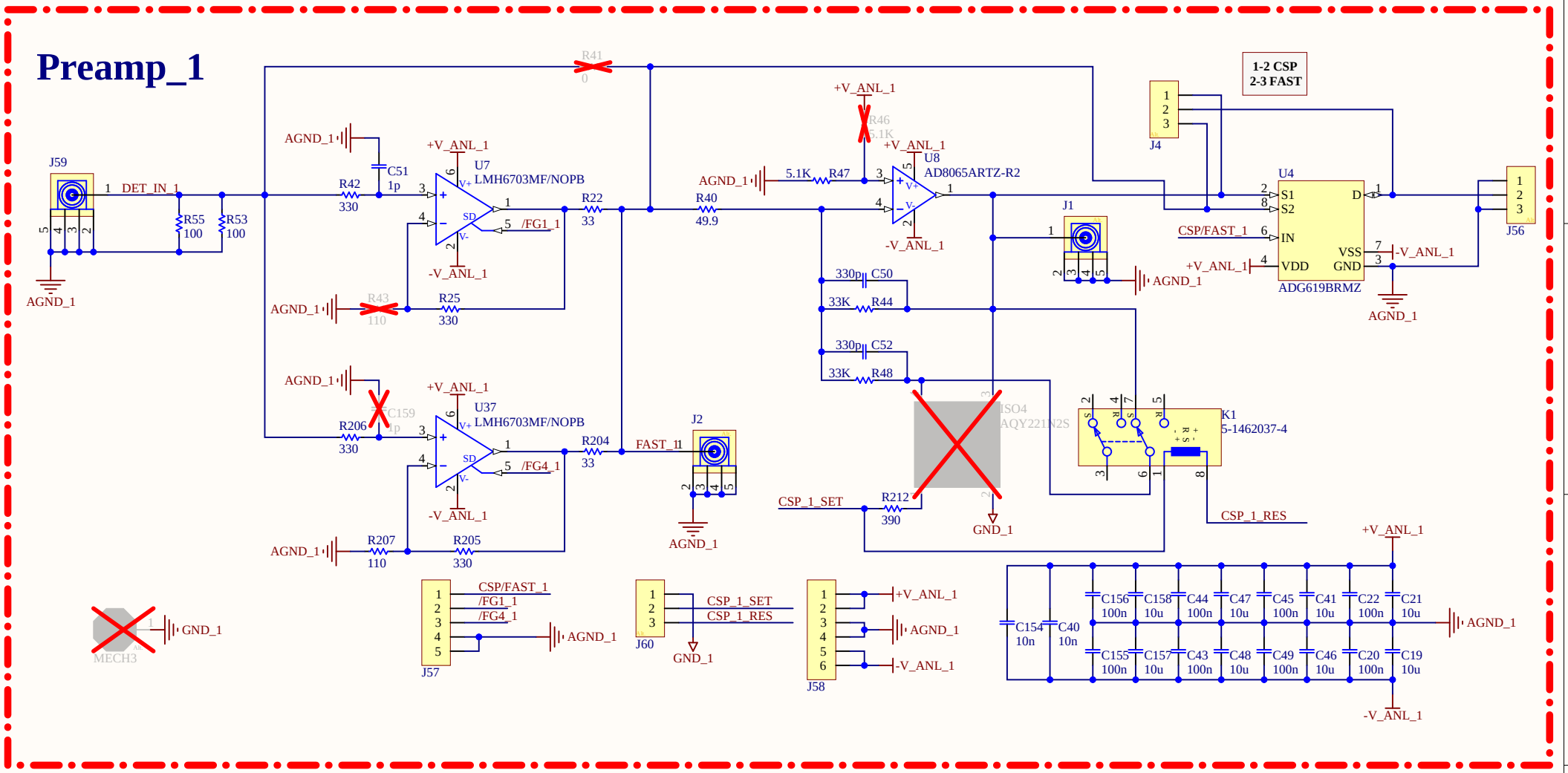

FRANKENSTEIN

CAEN *Tools for Discovery*

CONFIDENTIAL DOCUMENT

Model : Handheld EVM

Sheet Description: Preamp type 1

Pcb Code: BHAHELDDEV01

Filename and full path: Preamp_LMH6703 .SchDoc

Revision	
PCB	SCH
0	0

Date: 28/01/2025 09:40:03 Sheet 10 of 11

Reproduction, transfer, distribution of part or all of the contents in this document in any form without prior written permission of CAEN is prohibited

Preamp_2

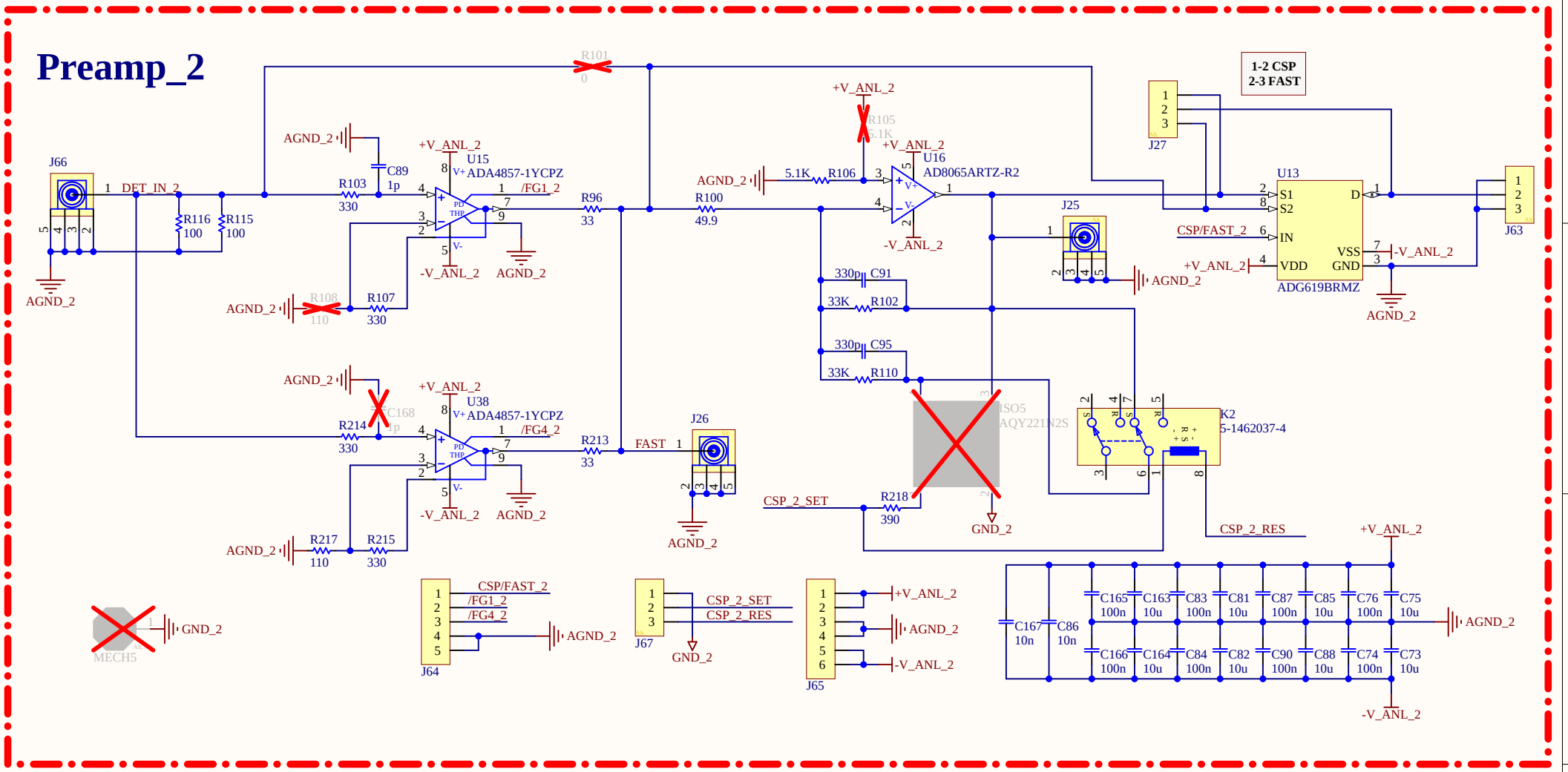

FRANKENSTEIN

CAEN *Tools for Discovery*

CONFIDENTIAL DOCUMENT

Model : Handheld EVM

Sheet Description: Preamp type 2

Pcb Code: BHAHELDDEV01

Filename and full path: Preamp_ADA4857.SchDoc

Revision	
PCB	SCH
0	0

Date: 28/01/2025 09:40:03 Sheet 11 of 11

Reproduction, transfer, distribution of part or all of the contents in this document in any form without prior written permission of CAEN is prohibited