LEGEND: DIRECTED BRANCH | CIRCUIT BREAKER – NORMALLY CLOSED | CIRCUIT BREAKER – NORMALLY OPEN | DISCONNECTOR – NORMALLY CLOSED | DISCONNECTOR – NORMALLY OPEN | GENERATION | EMBEDDED GENERATION | NORMALLY OPEN (OPERATIONALLY SPLIT) | 350kV DC | 220kV | 110kV | 66, 55, 50kV | 33, 25, 22kV | 16, 14.4, 11kV | Bus | 3 Winding Transformer | 2 Winding Transformer

DRAWING NUMBER TX36813 SHT1 REV GH

© COPYRIGHT 2000 TRANS POWER NEW ZEALAND LTD. ALL RIGHTS RESERVED. UNAUTHORISED USE PROHIBITED.

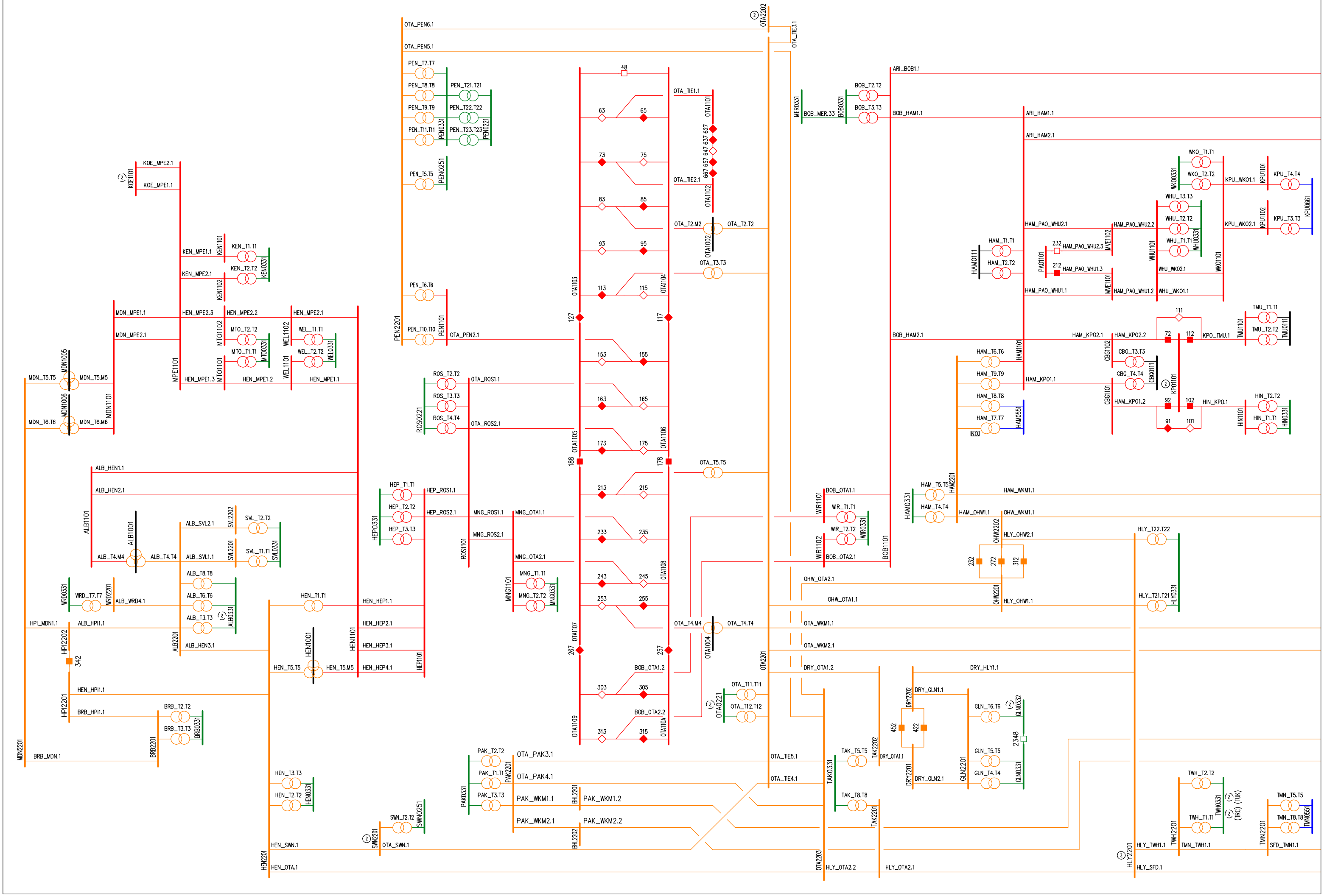

LEGEND — DIRECTED BRANCH — CIRCUIT BREAKER – NORMALLY CLOSED — CIRCUIT BREAKER – NORMALLY OPEN — DISCONNECTOR – NORMALLY CLOSED — DISCONNECTOR – NORMALLY OPEN — GENERATION — EMBEDDED GENERATION
NO NORMALLY OPEN (OPERATIONALLY SPLIT) — 350kV DC — 220kV — 110kV — 66, 55, 50kV — 33, 25, 22kV — 16, 14.4, 11kV — Bus — 3 Winding Transformer — 2 Winding Transformer

DRAWING NUMBER TX36813 SHT2 REV GH

© COPYRIGHT 2000 TRANS POWER NEW ZEALAND LTD. ALL RIGHTS RESERVED. UNAUTHORISED USE PROHIBITED.

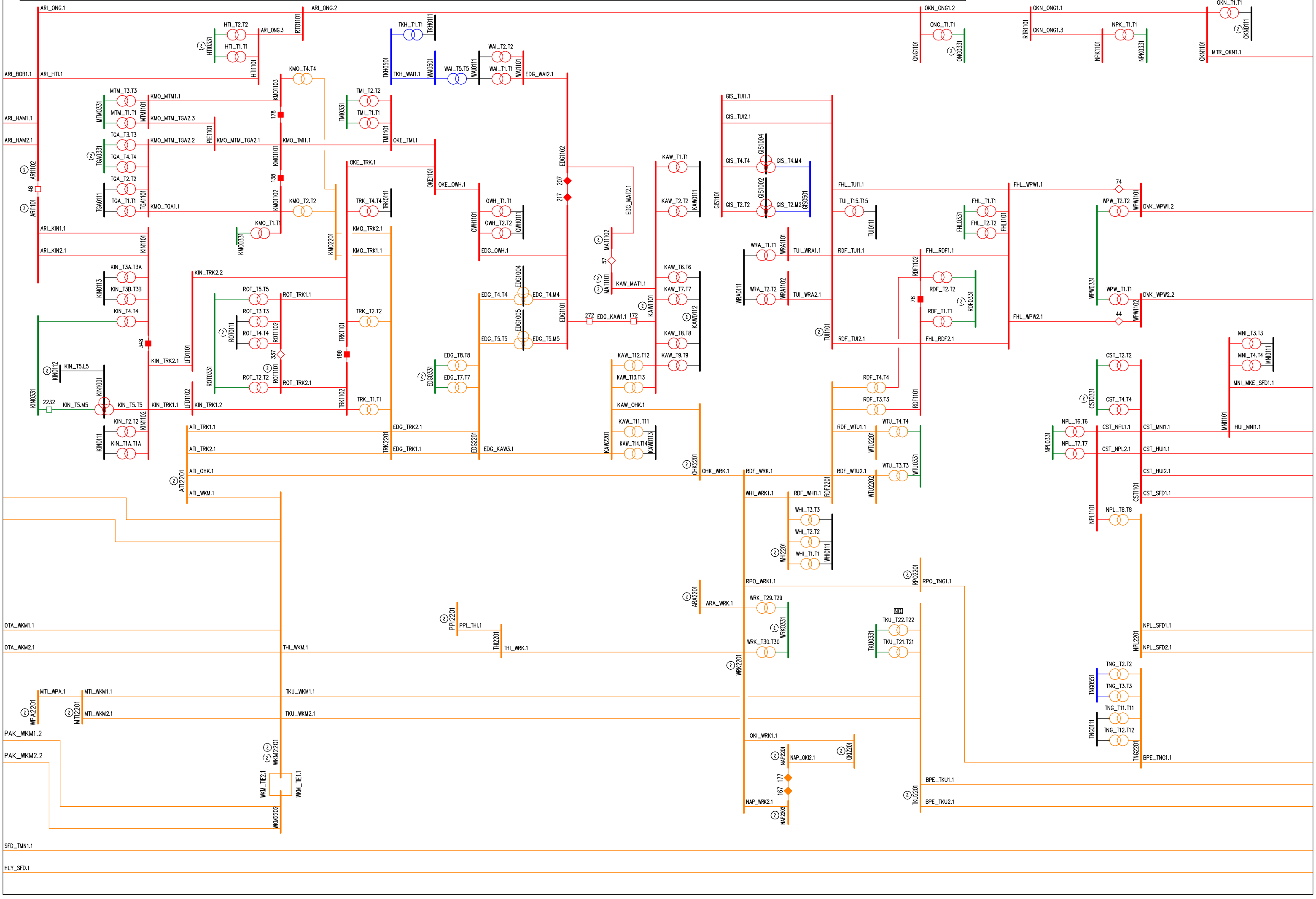

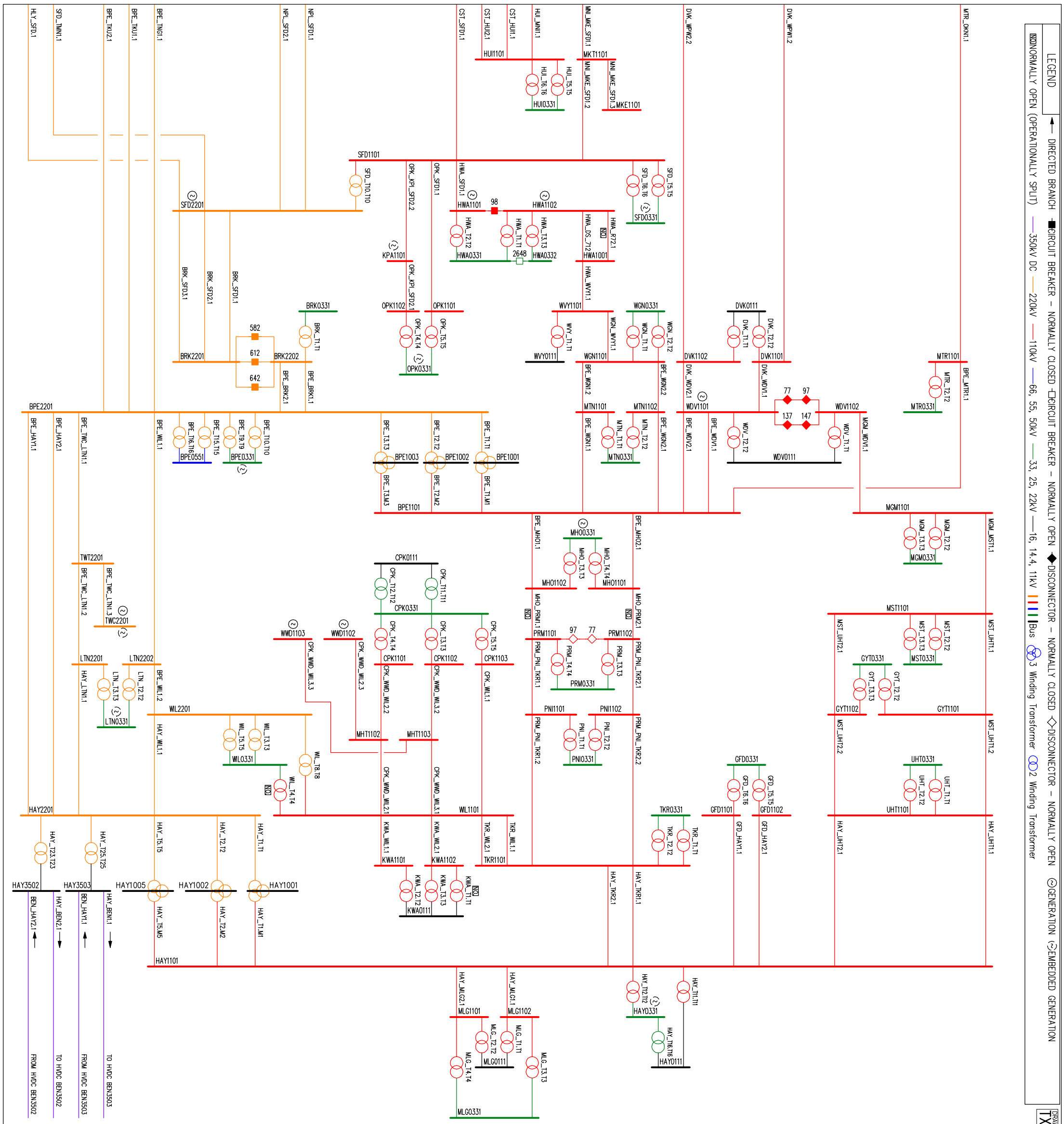

DRAWING NUMBER TX36813 SHT3 REV GH

© COPYRIGHT 2000 TRANS POWER NEW ZEALAND LTD.
ALL RIGHTS RESERVED. UNAUTHORISED USE PROHIBITED.

REV	DESCRIPTION	CONSULTANT NAME	CONSULTANT DRN	TP APP	TP DATE
GH	UPDATED: 05.08.2013 ADDITION: GIS_T2.M2, GIS_T4.M4, GIS1002, GIS1004, MDN_T5.M5, MDN_T6.M6, MDN1005, MDN1006 MODIFICATION: NAP_WRK2.1, NAP_OKI2.1, GIS_T2.T2, GIS_T4.T4, MDN_T5.T5, MDN_T6.T6 ...	AECOM	NJS	TC	8.13

DESIGNED	Redrawn	7/00
DRAWN	T Neighbours	7/00
CHECKED	D Wright	7/00
QC CHECKED		
APPROVED		
TP APPROVED	M Taniwha	8/00

PREPARED BY: Power Systems
PO Box 57095 Mana

TRANSPOWER

NETWORK DIAGRAMS

SPD MODEL

NORTH ISLAND

LEGEND: DIRECTED BRANCH | CIRCUIT BREAKER – NORMALLY CLOSED | CIRCUIT BREAKER – NORMALLY OPEN | DISCONNECTOR – NORMALLY CLOSED | DISCONNECTOR – NORMALLY OPEN | GENERATION | EMBEDDED GENERATION | NORMALLY OPEN (OPERATIONALLY SPLIT) | 350kV DC | 220kV | 110kV | 66, 55, 50kV | 33, 22kV | 16, 14.4, 11kV | Bus | 3 Winding Transformer | 2 Winding Transformer

DRAWING NUMBER TX36812 SHT1 REV DU

© COPYRIGHT 2000 TRANS POWER NEW ZEALAND LTD. ALL RIGHTS RESERVED. UNAUTHORISED USE PROHIBITED.

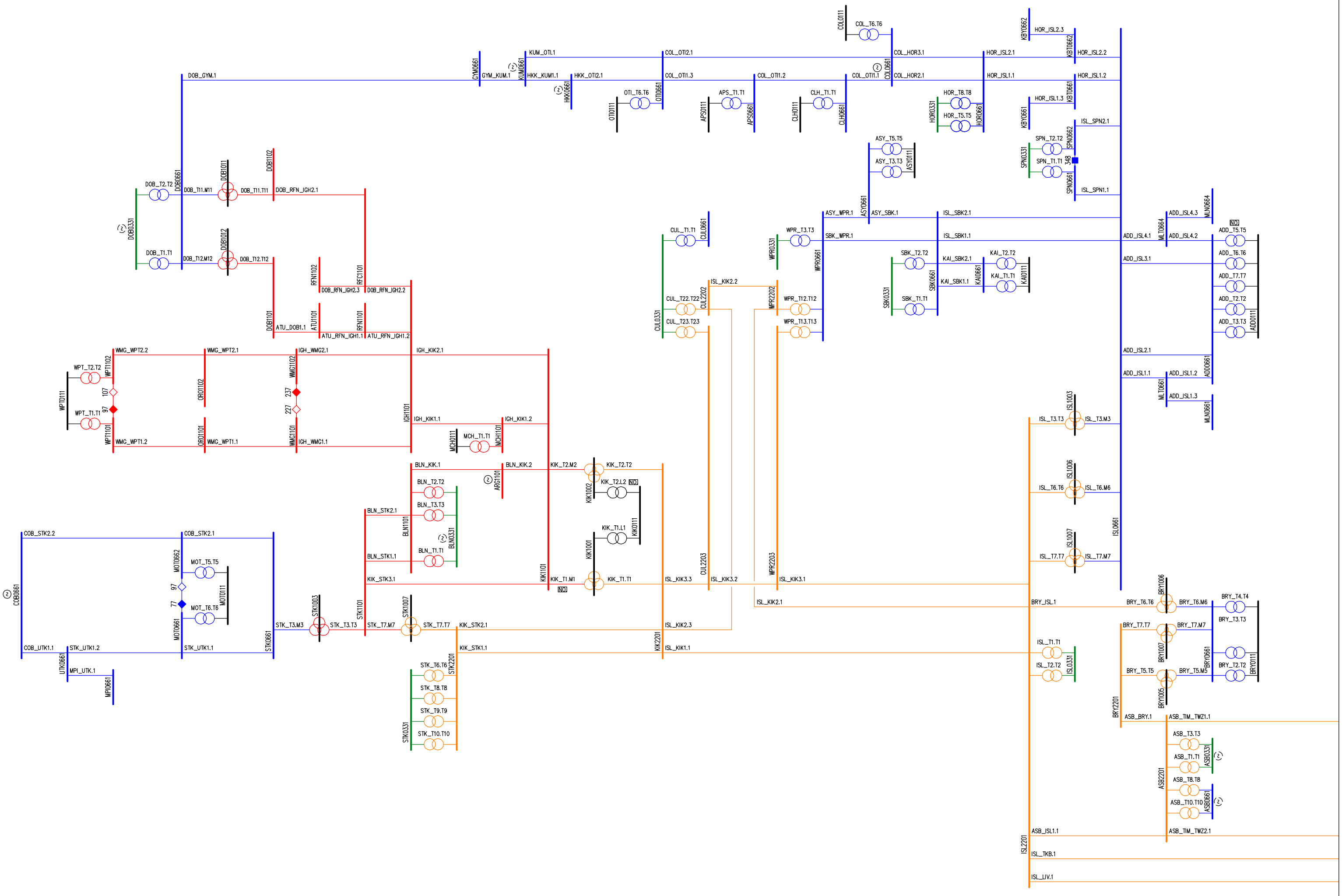

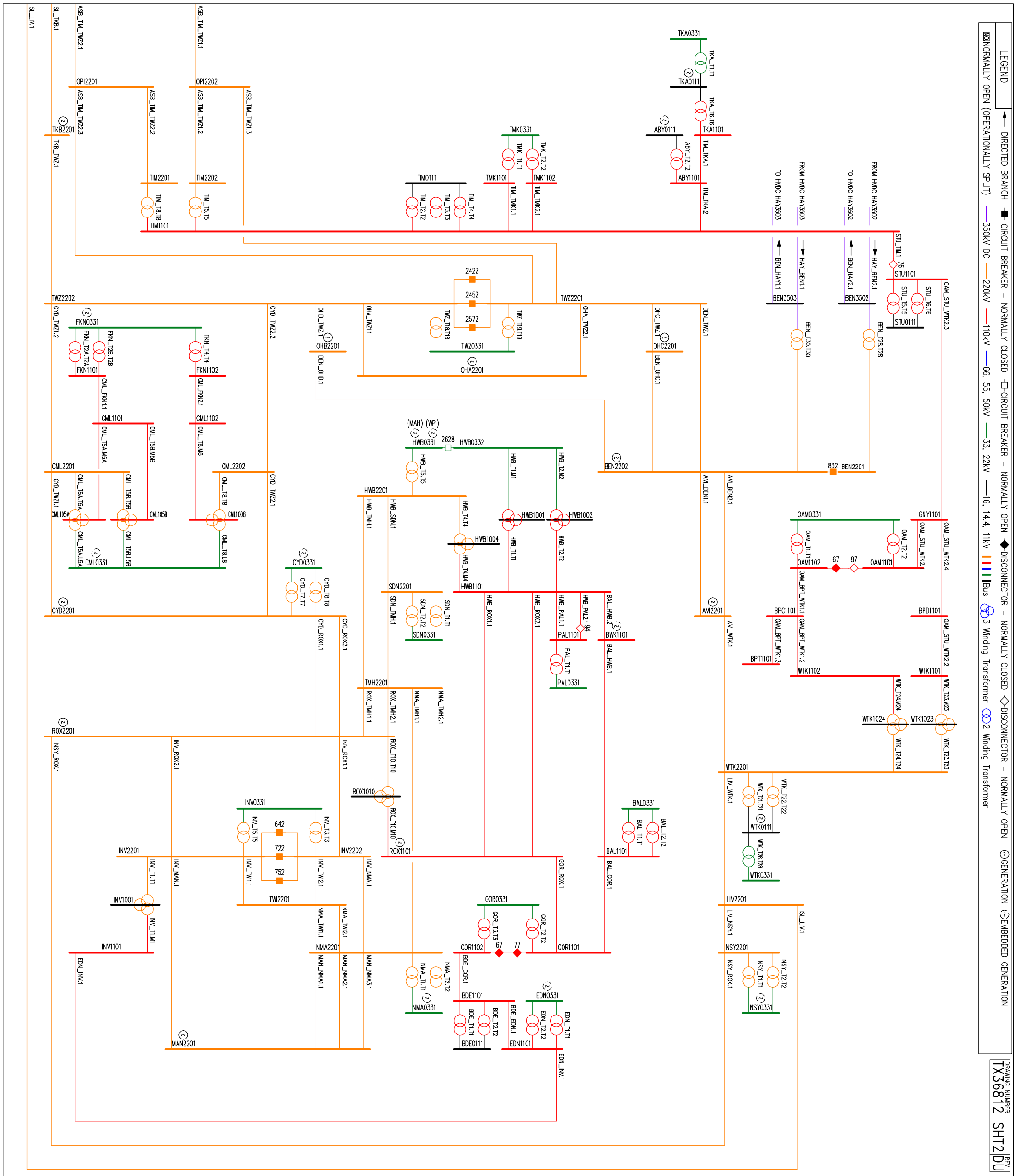

REV	DESCRIPTION	CONSULTANT NAME	CONSULTANT DRN	TP APP	TP DATE
DU	UPDATED: 25.06.2013 ADDITION: HWB_T1.M1, HWB_T2.M2, HWB1001, HWB1002, KBY0661, KBT0661, KBY0662, KBT0662, HOR_ISL1.2, HOR_ISL1.3, HOR_ISL2.2, HOR_ISL2.3 MODIFICATION: HWB_T1.T1, HWB_T2.T2, HOR_ISL1.1, HOR_ISL2.1 ...	AECOM	TC	TC	6.13

DESIGNED	Redrawn	7/00
DRAWN	T Neighbours	7/00
CHECKED	D Wright	7/00
QC CHECKED		
APPROVED		
TP APPROVED	M Taniwha	8/00

PREPARED BY: Power Systems
PO Box 57095 Mana

TRANSPOWER

NETWORK DIAGRAMS

SPD MODEL
SOUTH ISLAND

DRAWING NUMBER TX36812 SHT2 REV DU

© COPYRIGHT 2000 TRANS POWER NEW ZEALAND LTD.
ALL RIGHTS RESERVED. UNAUTHORISED USE PROHIBITED.