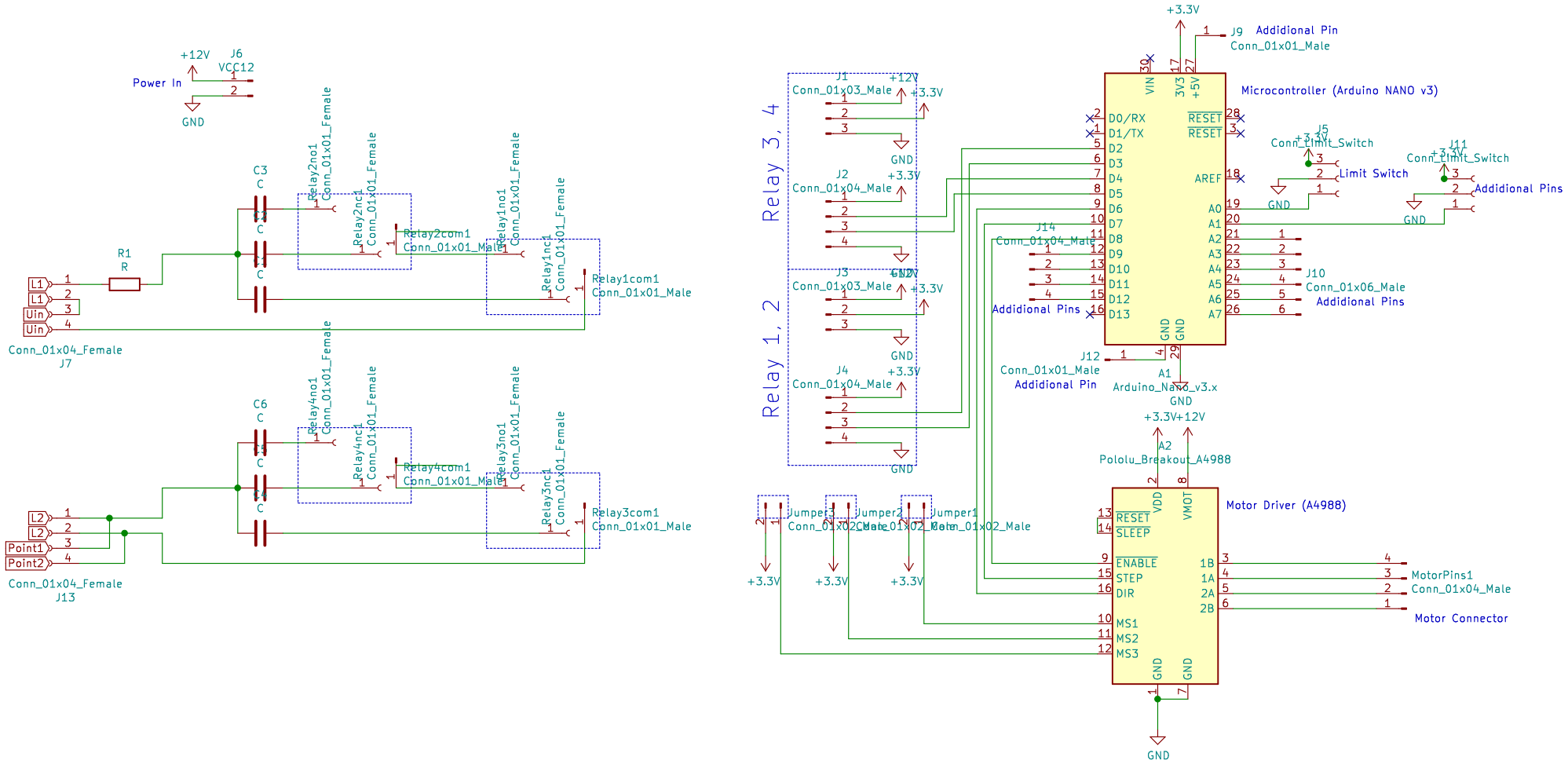
Power In
+12V
J6
VCC12
GND
C3
C
R1
R
L1
L1
Uin
Uin
Conn_01x04_Female
J7
Relay2no1
Conn_01x01_Female
Relay2nc1
Conn_01x01_Female
Relay2com1
Conn_01x01_Male
Relay1no1
Conn_01x01_Female
Relay1nc1
Conn_01x01_Female
Relay1com1
Conn_01x01_Male
C6
C
L2
L2
Point1
Point2
Conn_01x04_Female
J13
Relay4no1
Conn_01x01_Female
Relay4nc1
Conn_01x01_Female
Relay4com1
Conn_01x01_Male
Relay3no1
Conn_01x01_Female
Relay3nc1
Conn_01x01_Female
Relay3com1
Conn_01x01_Male
Relay 3, 4
Relay 1, 2
J1
Conn_01x03_Male
J2
Conn_01x04_Male
J3
Conn_01x03_Male
J4
Conn_01x04_Male
+12V
+3.3V
GND
J9
Addidional Pin
Conn_01x01_Male
Microcontroller (Arduino NANO v3)
VIN
3V3
+5V
D0/RX
D1/TX
D2
D3
D4
D5
D6
D7
D8
D9
D10
D11
D12
D13
RESET
RESET
AREF
A0
A1
A2
A3
A4
A5
A6
A7
GND
GND
J5
Conn_Limit_Switch
Limit Switch
J11
Conn_Limit_Switch
Addidional Pins
J10
Conn_01x06_Male
Addidional Pins
J14
Conn_01x04_Male
Addidional Pins
J12
Conn_01x01_Male
Addidional Pin
A1
Arduino_Nano_v3.x
+3.3V+12V
A2
Pololu_Breakout_A4988
Motor Driver (A4988)
VDD
VMOT
RESET
SLEEP
ENABLE
STEP
DIR
MS1
MS2
MS3
1B
1A
2A
2B
MotorPins1
Conn_01x04_Male
Motor Connector
Jumper3
Conn_01x02_Male
Jumper2
Conn_01x02_Male
Jumper1
Conn_01x02_Male