Infrared Sensor with RF Communication Between Units

Leslie Eide Max Cope Chris Klupenger

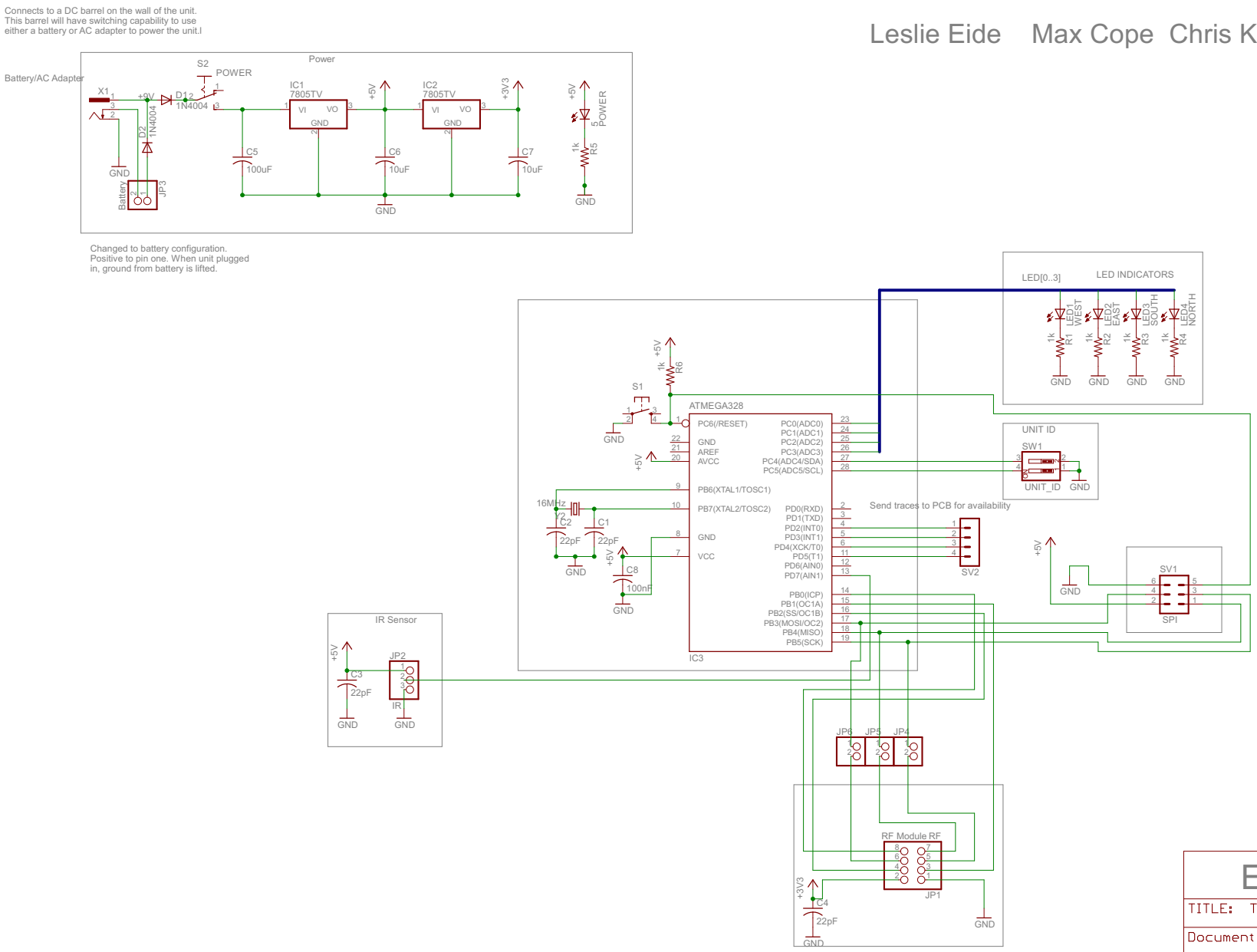

ECE 411 Practicum

TITLE: T09_Signal Senders_Build	
Document Number:	REV: 2
Date: 11/25/2013 11:09:31 AM	Sheet: 1/1