KEEP–OUT ZONE

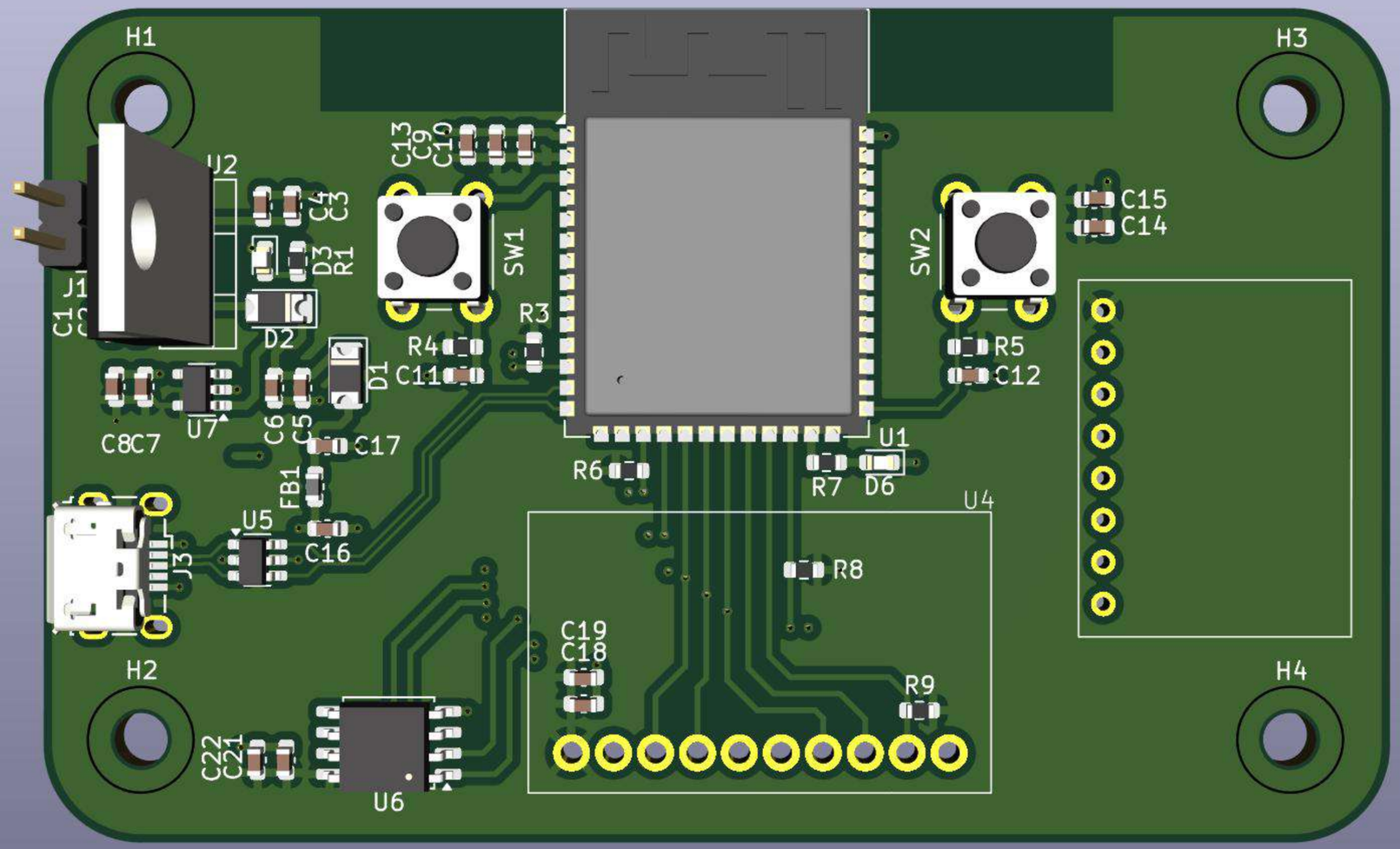

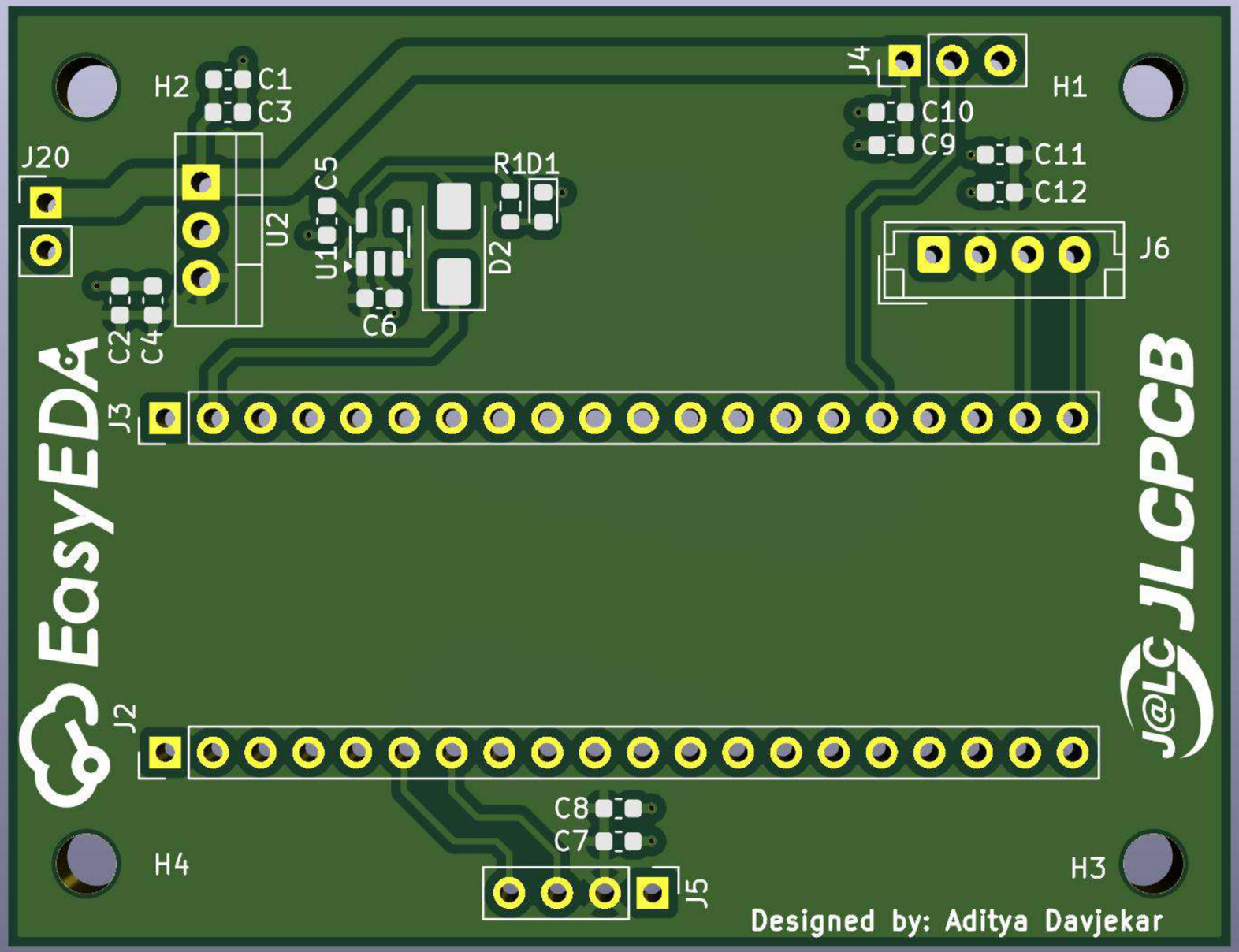
H2
C1
C3
J20
U2
C5
U1
C6
R1
D1
D2
C2
C4
J3
J2
J4
H1
C10
C9
C11
C12
J6
C8
C7
J5
H4
H3
EasyEDA
JLCPCB
Designed by: Aditya Davjekar

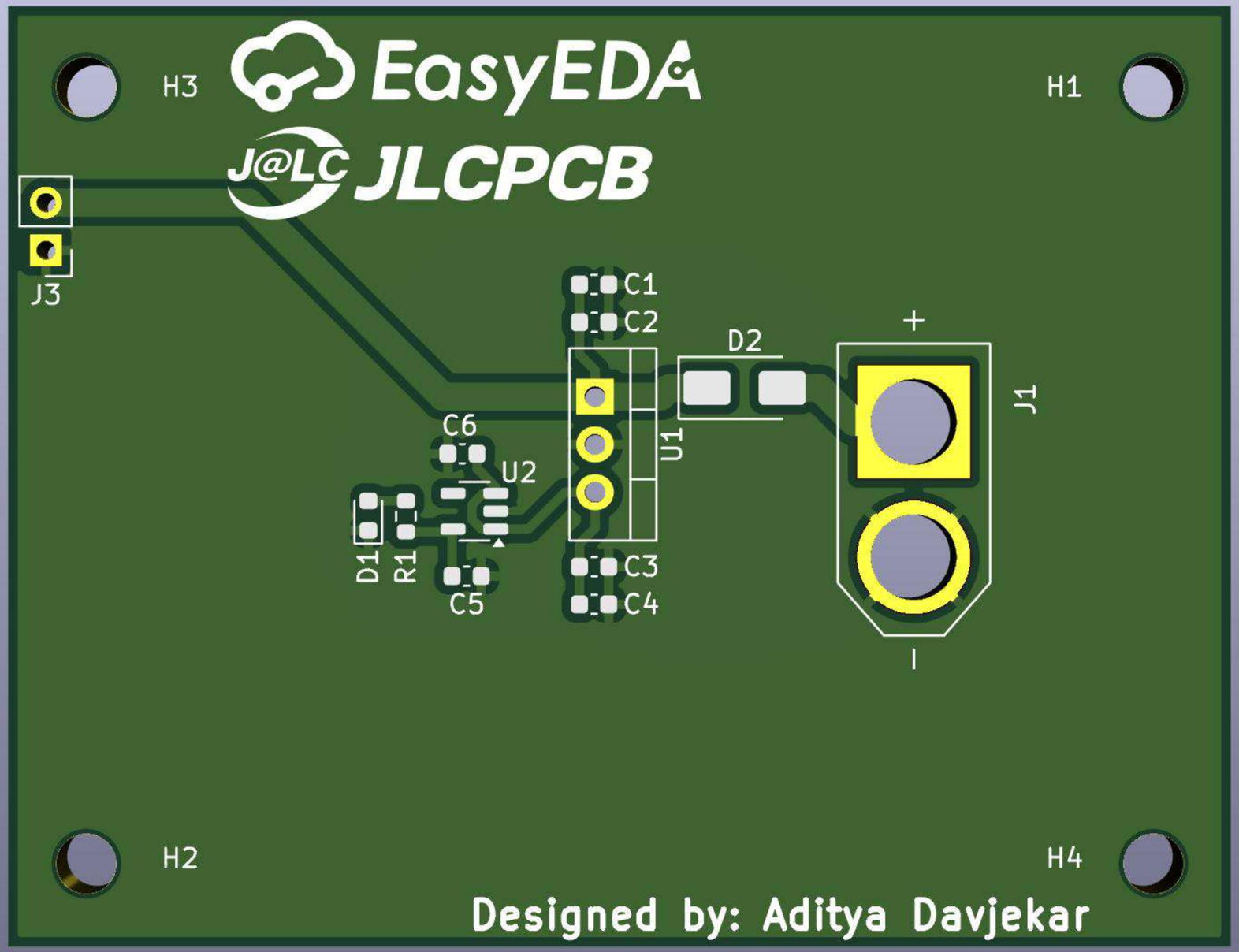
H3
EasyEDA
H1
J@LC JLCPCB
J3
C1
C2
D2
+
J1
C6
U2
U1
D1
R1
C5
C3
C4
-
H2
H4
Designed by: Aditya Davjekar