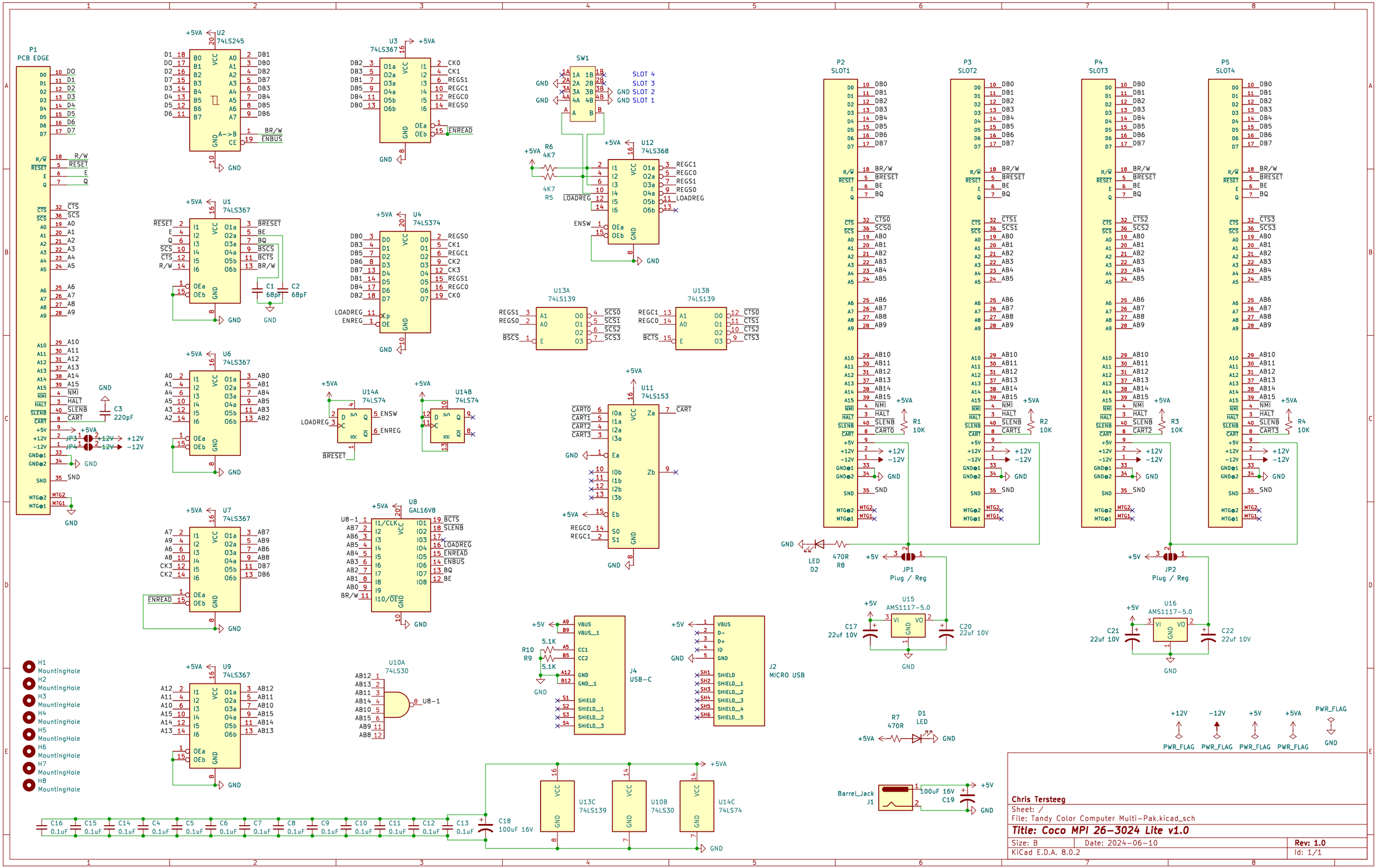
P1
PCB EDGE
U2
74LS245
U3
74LS367
SW1
SLOT 4
SLOT 3
SLOT 2
SLOT 1
U12
74LS368
R6
4K7
R5
U1
74LS367
U4
74LS374
U13A
74LS139
U13B
74LS139
U6
74LS367
U14A
74LS74
U14B
74LS74
U11
74LS153
U7
74LS367
U8
GAL16V8
U9
74LS367
U10A
74LS30
U8-1
P2
SLOT1
P3
SLOT2
P4
SLOT3
P5
SLOT4
R1
10K
R2
10K
R3
10K
R4
10K
LED
D2
470R
R8
JP1
Plug / Reg
JP2
Plug / Reg
U15
AMS1117-5.0
U16
AMS1117-5.0
C17
22uf 10V
C20
22uf 10V
C21
22uf 10V
C22
22uf 10V
J4
USB-C
J2
MICRO USB
R10
5.1K
R9
5.1K
R7
470R
D1
LED
Barrel_Jack
J1
100uF 16V
C19
C1
68pF
C2
68pF
C3
220pF
H1 MountingHole
H2 MountingHole
H3 MountingHole
H4 MountingHole
H5 MountingHole
H6 MountingHole
H7 MountingHole
H8 MountingHole
C16 0.1uF
C15 0.1uF
C14 0.1uF
C4 0.1uF
C5 0.1uF
C6 0.1uF
C7 0.1uF
C8 0.1uF
C9 0.1uF
C10 0.1uF
C11 0.1uF
C12 0.1uF
C13 0.1uF
C18
100uF 16V
U13C
74LS139
U10B
74LS30
U14C
74LS74
PWR_FLAG
Chris Tersteeg
Sheet: /
File: Tandy Color Computer Multi-Pak.kicad_sch
Title: Coco MPI 26-3024 Lite v1.0
Size: B
Date: 2024-06-10
Rev: 1.0
KiCad E.D.A. 8.0.2
Id: 1/1