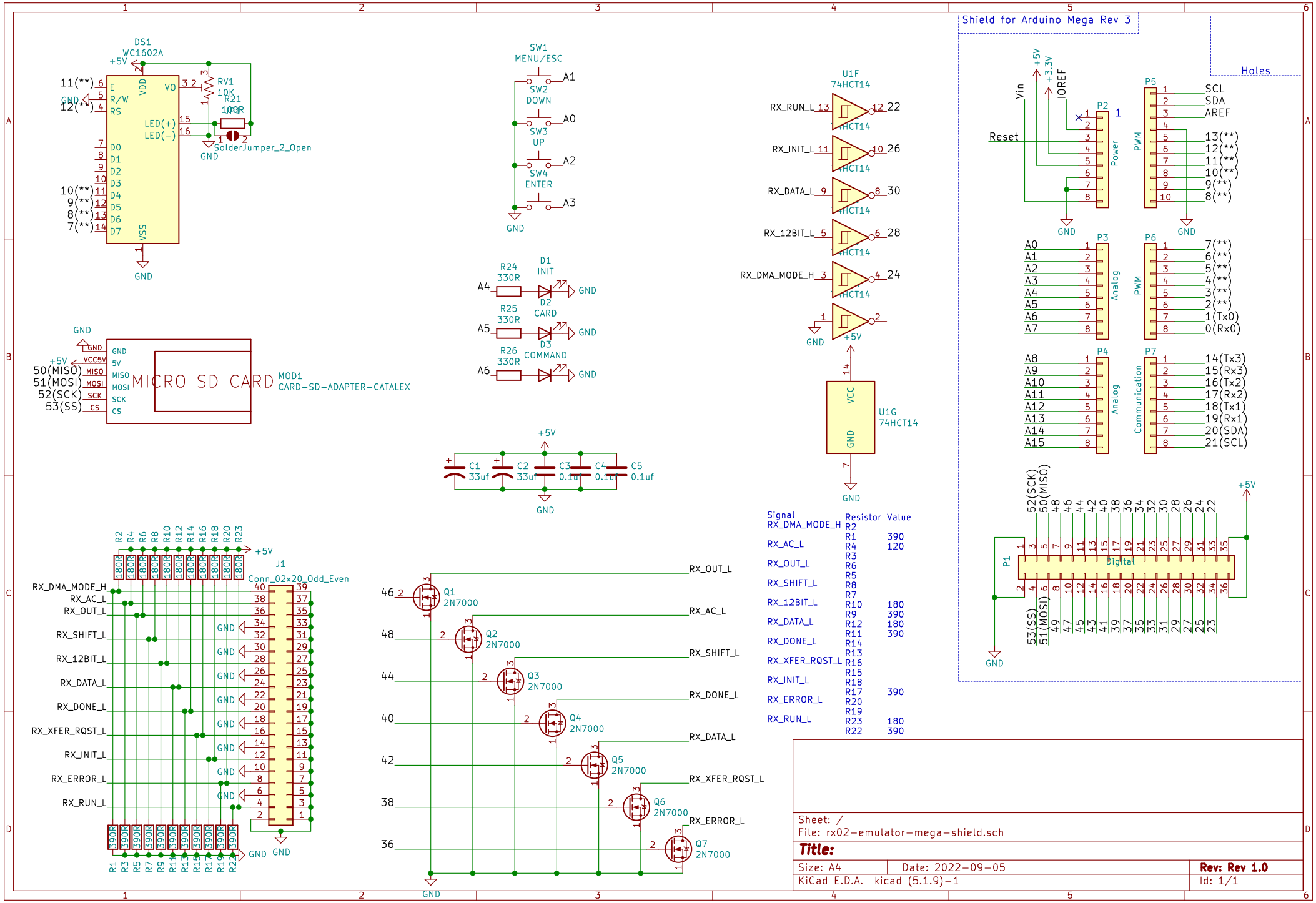
DS1
WC1602A
+5V
11(**)
GND
12(**)
10(**)
9(**)
8(**)
7(**)
E
R/W
RS
VDD
VO
LED(+)
LED(−)
D0
D1
D2
D3
D4
D5
D6
D7
VSS
RV1
10K
R21
100R
SolderJumper_2_Open
GND
SW1
MENU/ESC
SW2
DOWN
SW3
UP
SW4
ENTER
A1
A0
A2
A3
GND
R24
330R
D1
INIT
A4
R25
330R
D2
CARD
A5
R26
330R
D3
COMMAND
A6
GND
MICRO SD CARD
MOD1
CARD-SD-ADAPTER-CATALEX
50(MISO)
51(MOSI)
52(SCK)
53(SS)
MISO
MOSI
SCK
CS
VCC5V
5V
C1
33uf
C2
33uf
C3
0.1uf
C4
0.1uf
C5
0.1uf
J1
Conn_02x20_Odd_Even
RX_DMA_MODE_H
RX_AC_L
RX_OUT_L
RX_SHIFT_L
RX_12BIT_L
RX_DATA_L
RX_DONE_L
RX_XFER_RQST_L
RX_INIT_L
RX_ERROR_L
RX_RUN_L
Q1
2N7000
Q2
2N7000
Q3
2N7000
Q4
2N7000
Q5
2N7000
Q6
2N7000
Q7
2N7000
U1F
74HCT14
RX_RUN_L
RX_INIT_L
RX_DATA_L
RX_12BIT_L
RX_DMA_MODE_H
U1G
74HCT14
VCC
GND
Signal
Resistor
Value
RX_DMA_MODE_H R2
R1 390
RX_AC_L R4 120
RX_OUT_L R3
R6
RX_SHIFT_L R5
R8
RX_12BIT_L R7
R10 180
RX_DATA_L R9 390
R12 180
RX_DONE_L R11 390
R14
RX_XFER_RQST_L R13
R16
RX_INIT_L R15
R18
RX_ERROR_L R17 390
R20
RX_RUN_L R19
R23 180
R22 390
Shield for Arduino Mega Rev 3
Holes
Vin
+5V
+3.3V
IOREF
Reset
P2
Power
P5
PWM
SCL
SDA
AREF
13(**)
12(**)
11(**)
10(**)
9(**)
8(**)
P3
Analog
A0
A1
A2
A3
A4
A5
A6
A7
P6
PWM
7(**)
6(**)
5(**)
4(**)
3(**)
2(**)
1(Tx0)
0(Rx0)
P4
Analog
A8
A9
A10
A11
A12
A13
A14
A15
P7
Communication
14(Tx3)
15(Rx3)
16(Tx2)
17(Rx2)
18(Tx1)
19(Rx1)
20(SDA)
21(SCL)
P1
Digital
52(SCK)
50(MISO)
53(SS)
51(MOSI)
Sheet: /
File: rx02-emulator-mega-shield.sch
Title:
Size: A4
Date: 2022-09-05
Rev: Rev 1.0
KiCad E.D.A. kicad (5.1.9)-1
Id: 1/1