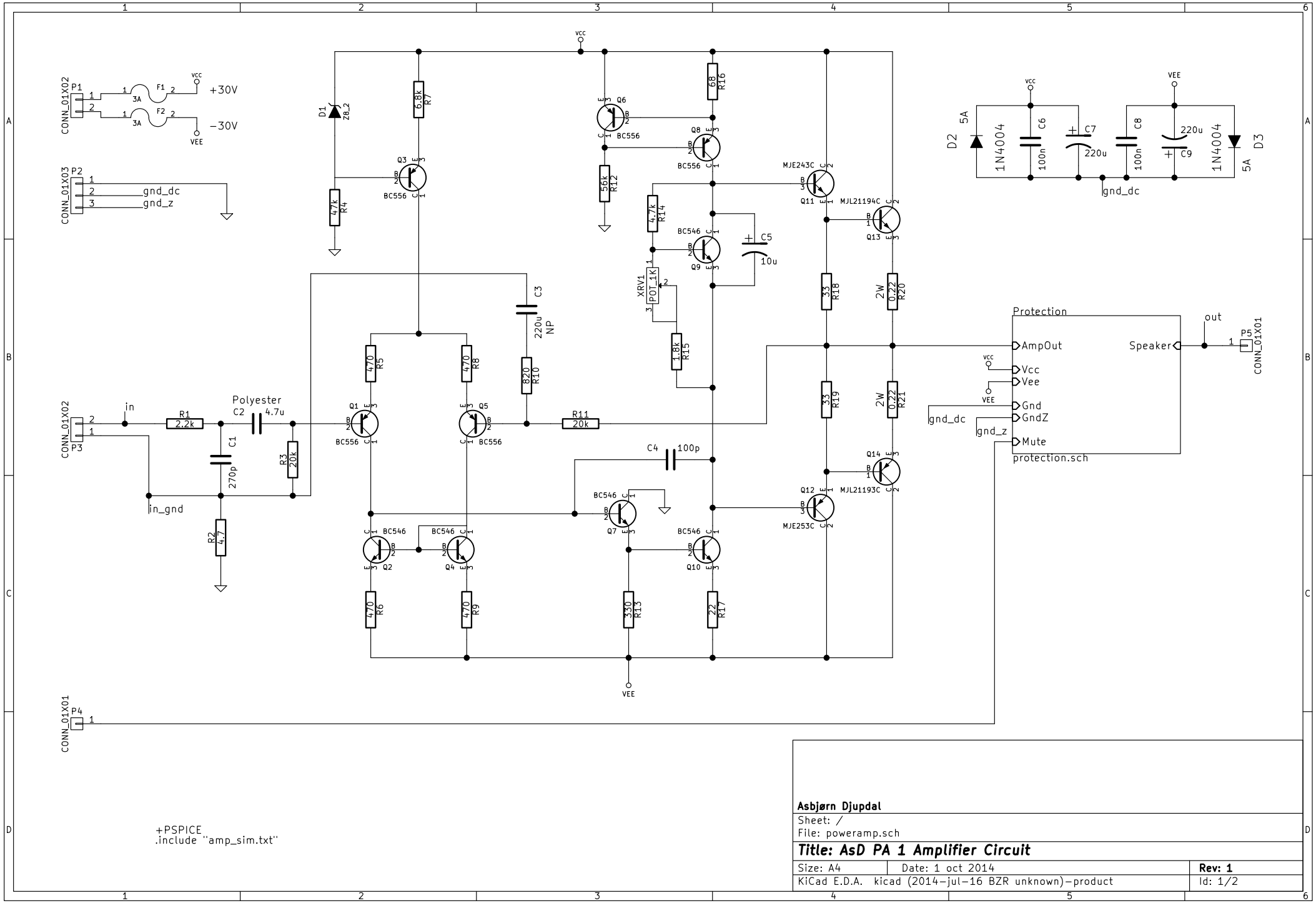

Asbjørn Djupdal

Sheet: /

File: poweramp.sch

Title: AsD PA 1 Amplifier Circuit

Size: A4	Date: 1 oct 2014	**Rev: 1**
KiCad E.D.A. kicad (2014-jul-16 BZR unknown)-product		Id: 1/2

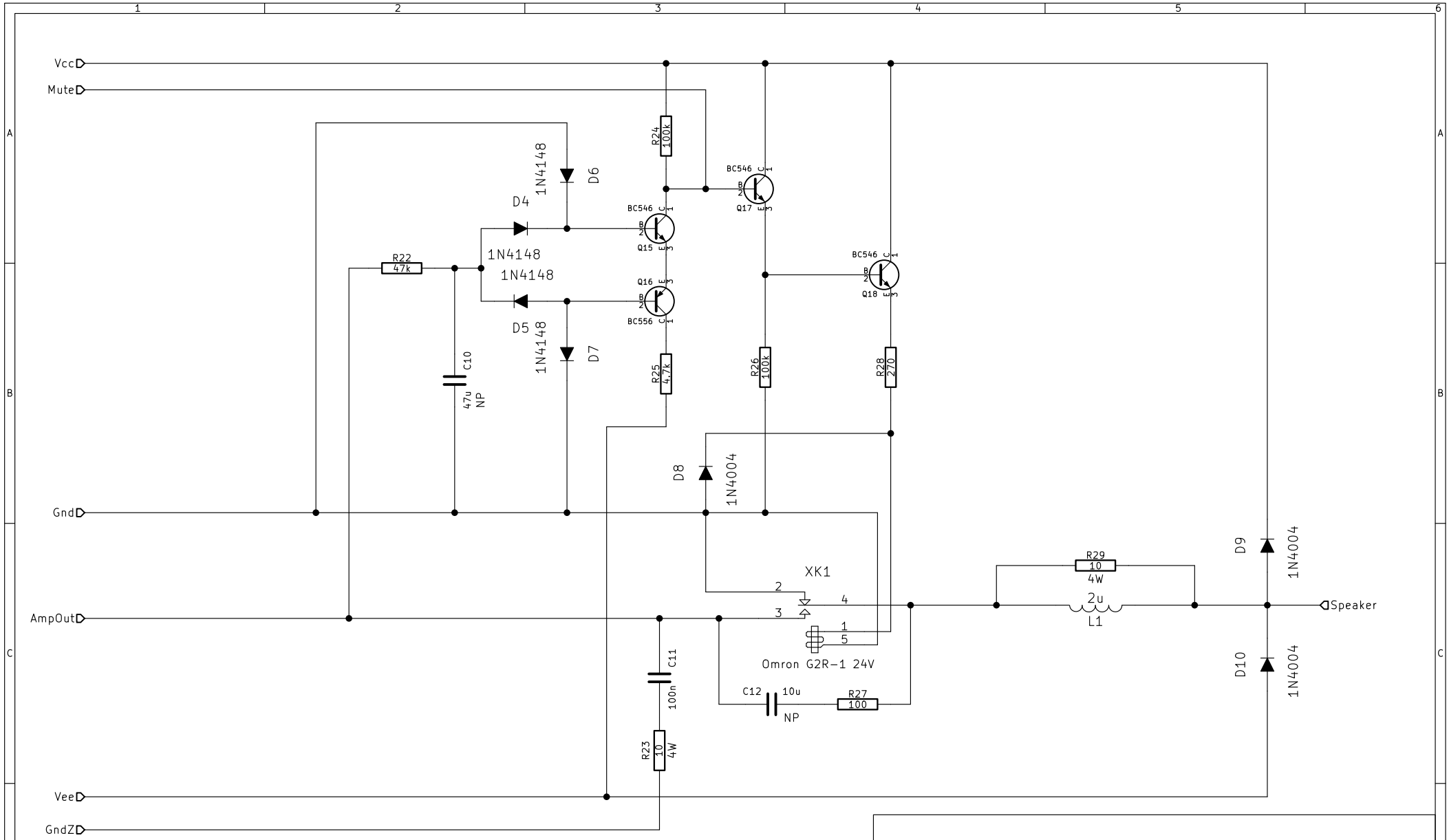

Asbjørn Djupdal

Sheet: /Protection/

File: protection.sch

Title: AsD PA 1 Protection Circuit

Size: A4	Date: 1 oct 2014	**Rev:**
KiCad E.D.A. kicad (2014-jul-16 BZR unknown)-product		Id: 2/2