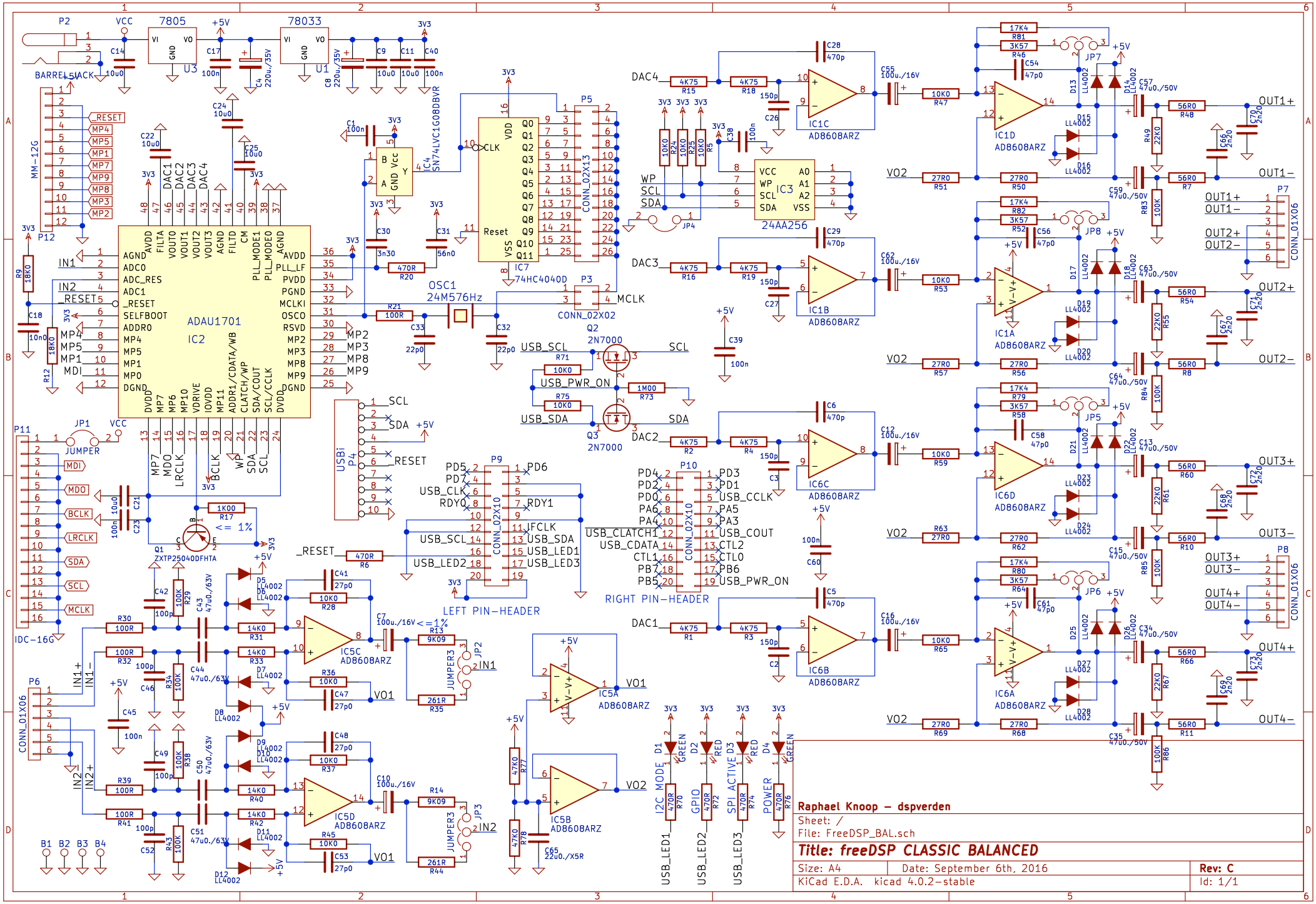
ADAU1701
IC2
24AA256
IC3
74HC4040D
IC7
SN74LVC1G08DBVR
IC4
AD8608ARZ
OSC1
24M576Hz
LEFT PIN-HEADER
RIGHT PIN-HEADER
Raphael Knoop – dspverden
Sheet: /
File: FreeDSP_BAL.sch
Title: freeDSP CLASSIC BALANCED
Size: A4
Date: September 6th, 2016
Rev: C
KiCad E.D.A. kicad 4.0.2-stable
Id: 1/1