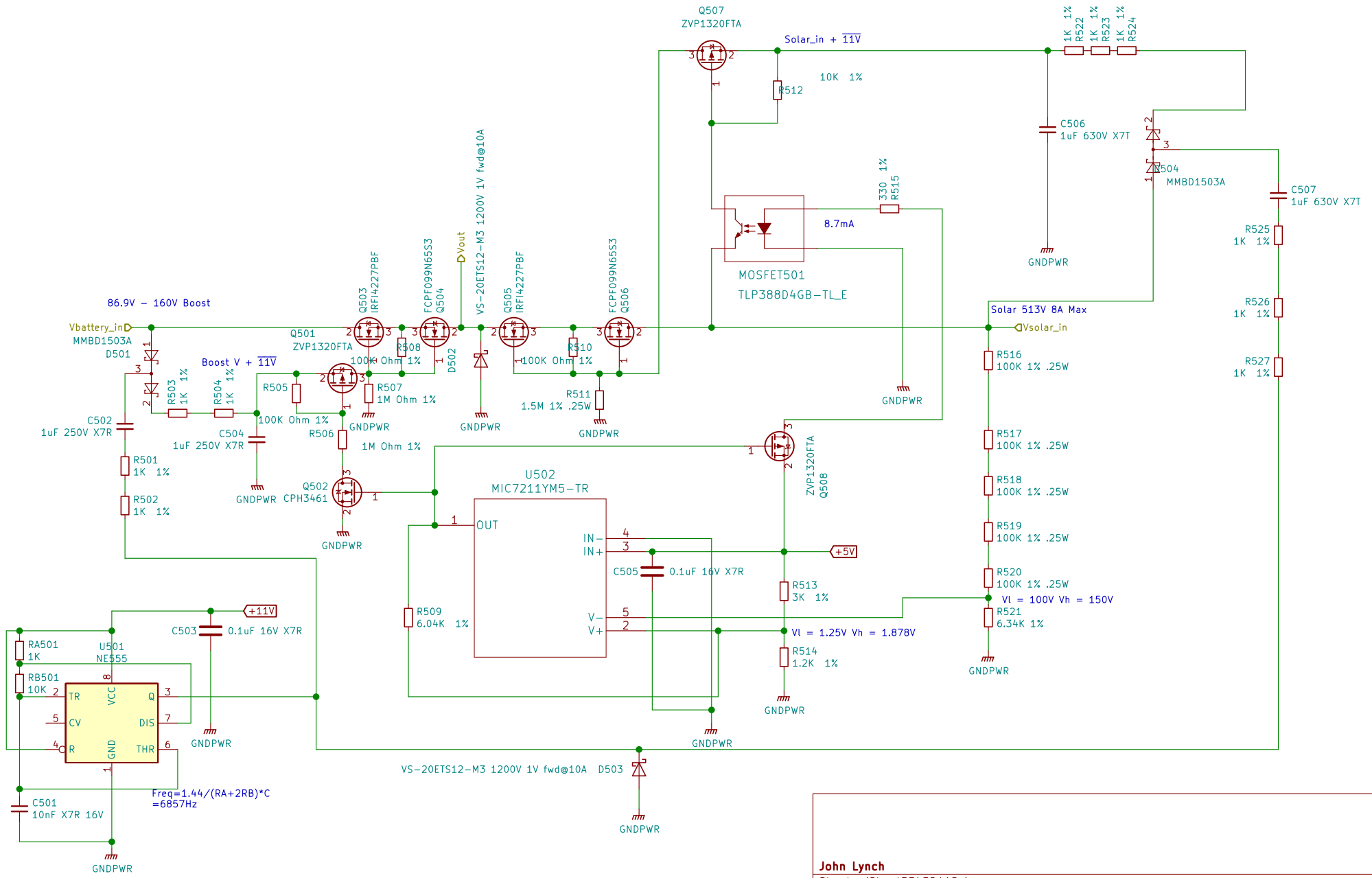

John Lynch

Sheet: /Sheet5F4EB1AB/

File: SolarDCSwitch.sch

Title: Battery / Solar Panel to Inverter Multiplexer

Size: A4	Date: 2020-04-1	Rev: 1
KiCad E.D.A. kicad 5.1.5-52549c586ubuntu18.04.1		Id: 5/5