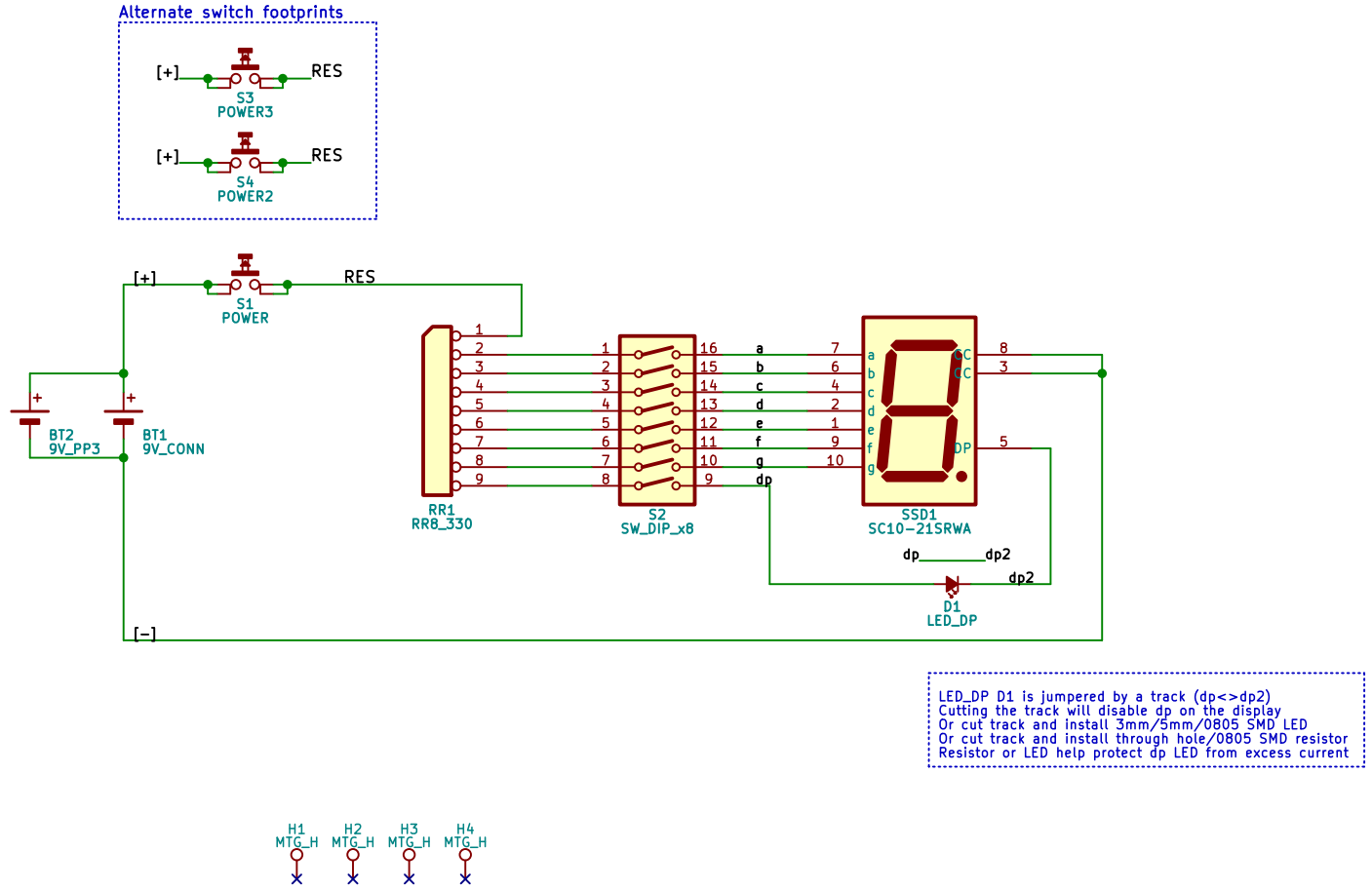

LED_DP D1 is jumpered by a track (dp<>dp2)
Cutting the track will disable dp on the display
Or cut track and install 3mm/5mm/0805 SMD LED
Or cut track and install through hole/0805 SMD resistor
Resistor or LED help protect dp LED from excess current

Sheet: /
File: lumitron.sch

Title:

Size: A4	Date:	Rev:
KiCad E.D.A. kicad 4.0.7-e2-637658ubuntu16.04.1		Id: 1/1