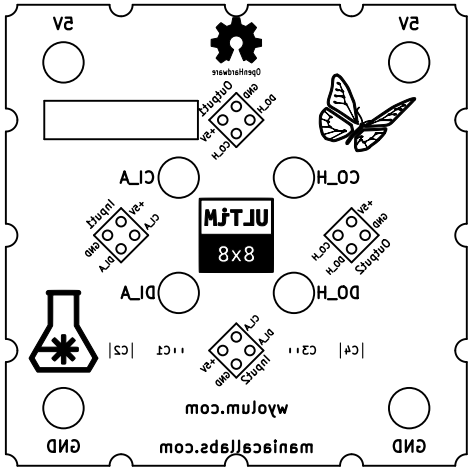

Sheet:
File: ultim8x8.kicad_pcb

Title:

Size: A4	Date:	**Rev:**
KiCad E.D.A. kicad 4.0.5-e0-633749ubuntu16.04.1		Id: 1/1