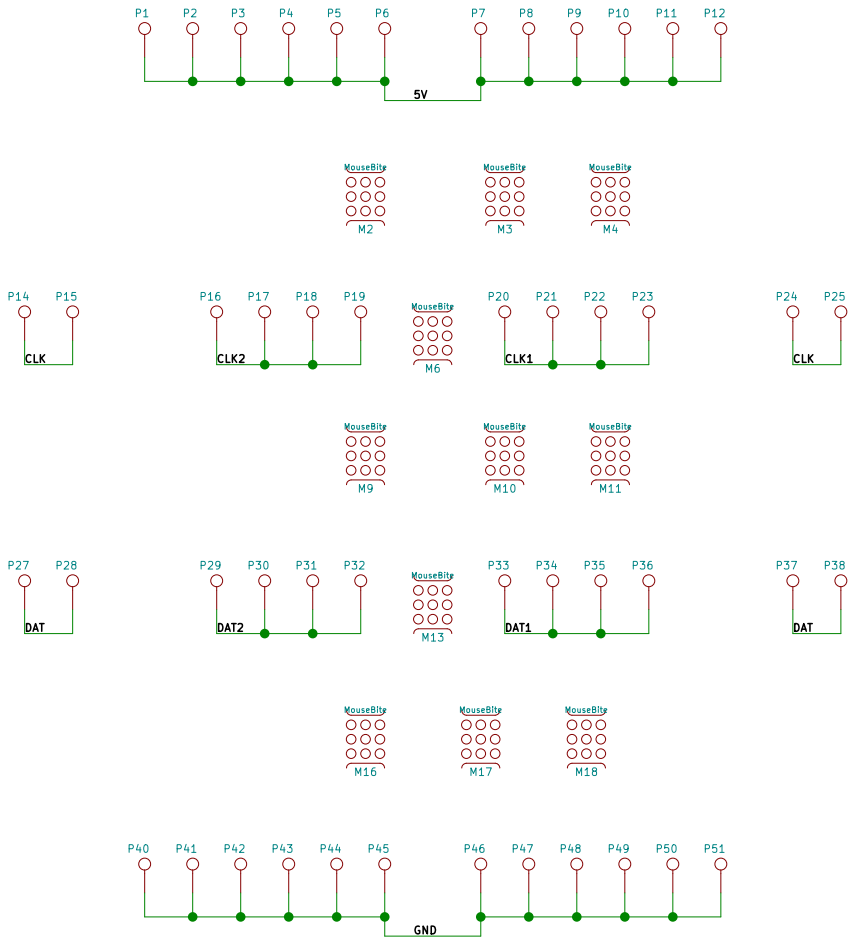

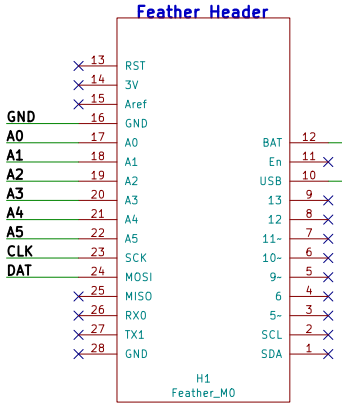

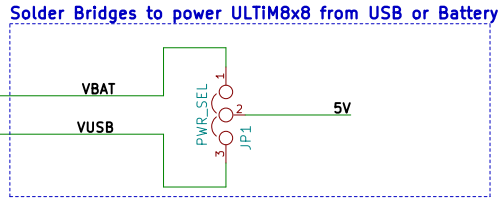

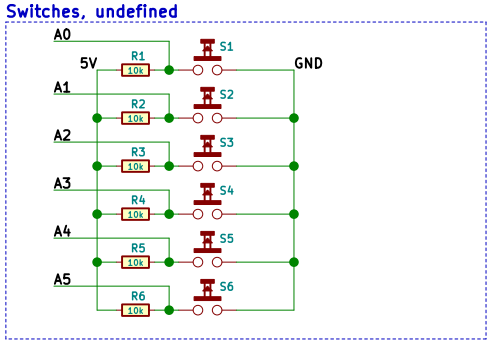

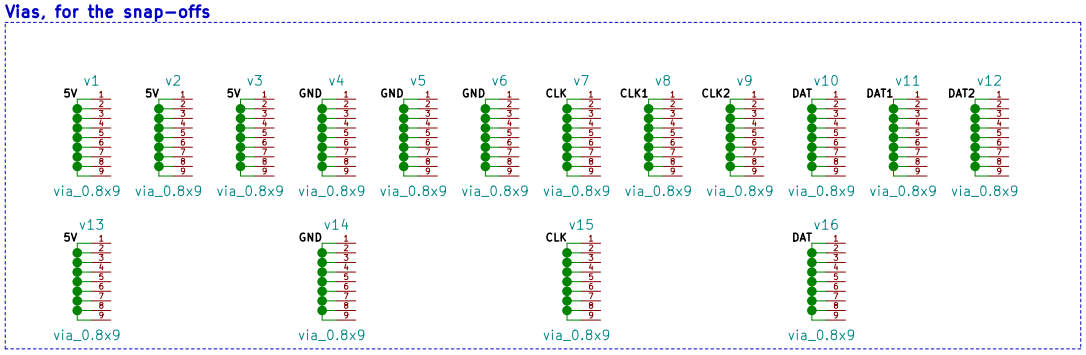

www.maniacallabs.com
www.wyolum.com

connect three ULTiM8x8 panels + one Feather M0 + six switches

Maniacal Labs & WyoLum

Sheet: /
File: ultim_bus.sch

Title: ULTiM8x8 Bus Board		
Size: A4	Date: 2016-10-29	**Rev: 2.0**
KiCad E.D.A. kicad 4.0.6-e0-634953ubuntu16.04.1		Id: 1/1