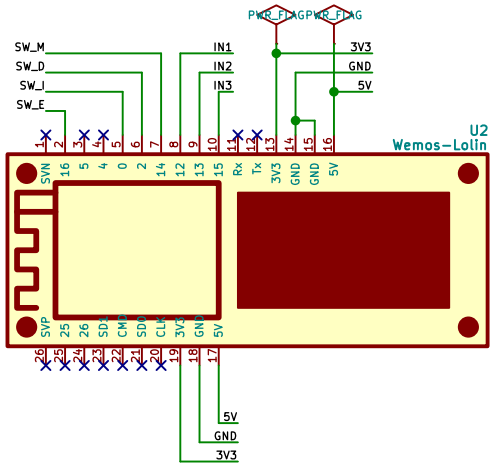

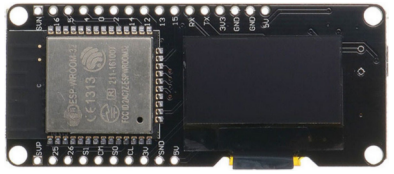

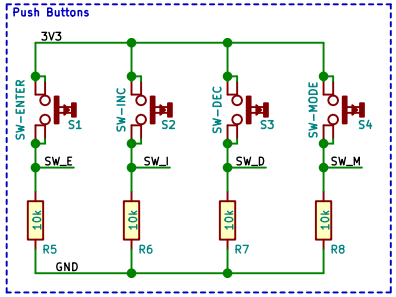

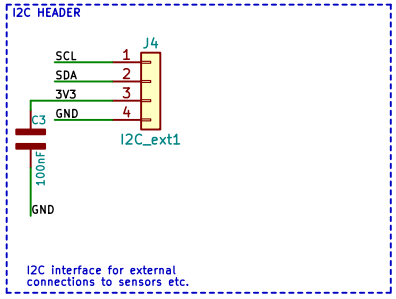

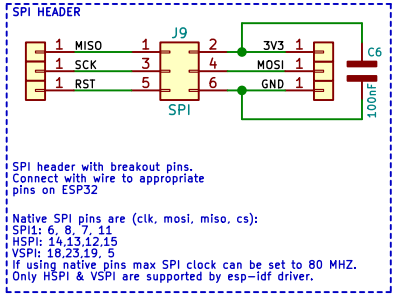

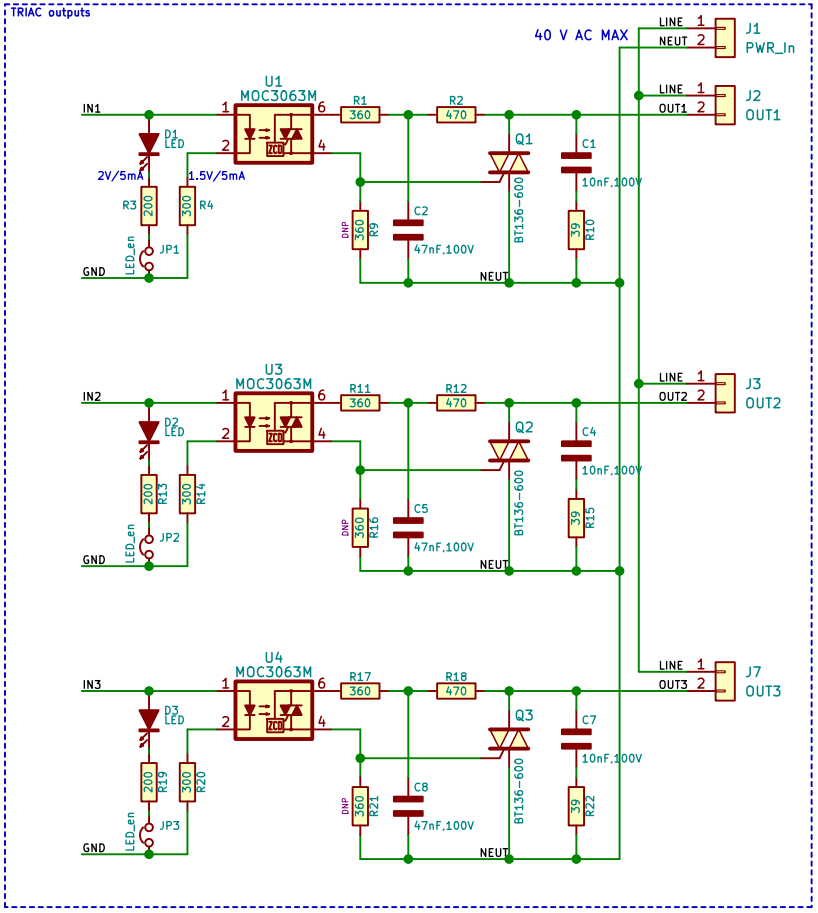

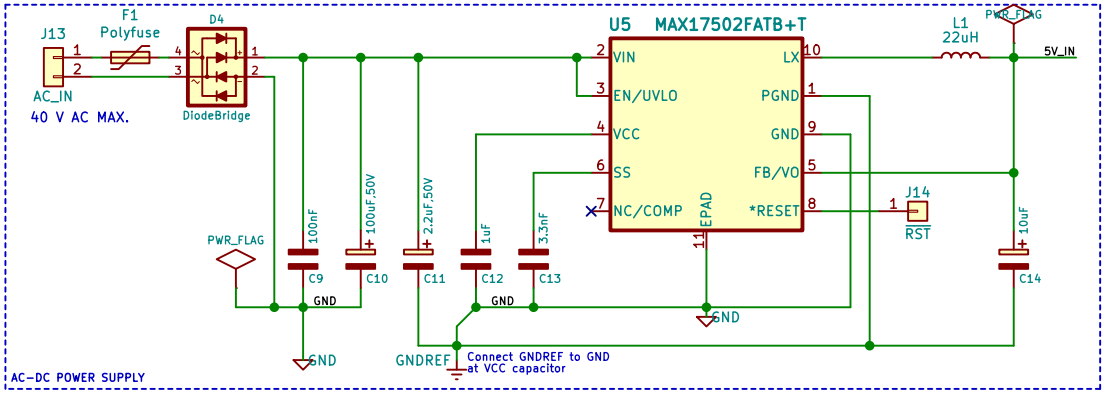

BOM :
1. ESP32 : Wemos Lolin
2. Opto : MOC3063SR2M
3. Triac : BT134-600E,127
4. LED : LTST-C193KGKT-5A
5. Bridge Rectifier : MDB6S
6. PTC Fuse : 0ZCF0075AF2C
7. DC-DC Converter : MAX17502
8. 10nF,250V : LDEQE2100KA5N00
9. Inductor L1 : ELL-8TP220MB

WyoLum

Sheet: /

File: wyostat.sch

Title: WYOSTAT

Size: A4	Date: 2018-03-12	Rev: rev 1
KiCad E.D.A. kicad no-vcs-found-67ccf7661ubuntu16.04.1		Id: 1/1