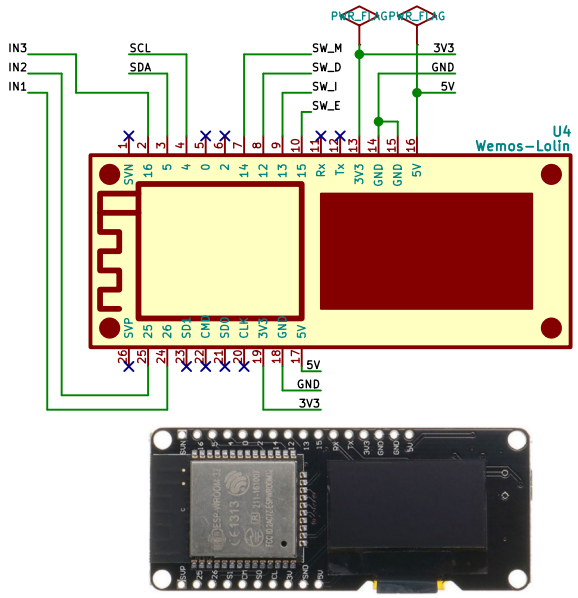

INPUT POWER

Input Power sources are :
a. Micro USB 5V to Wemos Lolin
b. 28 V AC converted to 5 V via switching regulator
c. 115 V AC converted to 5 V via wall wart or switching regulator

When using option "b" or "c", the micro USB cable
MUST be removed to prevent power conflicts.

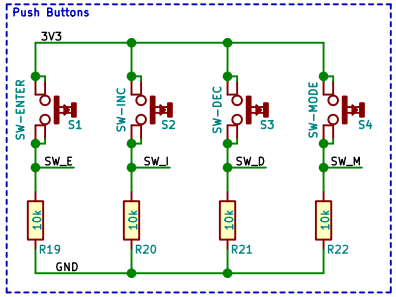

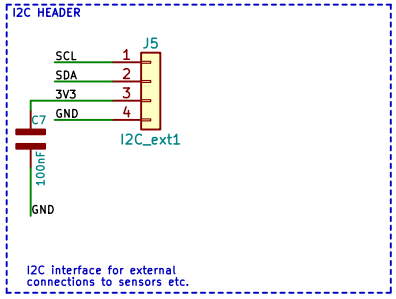

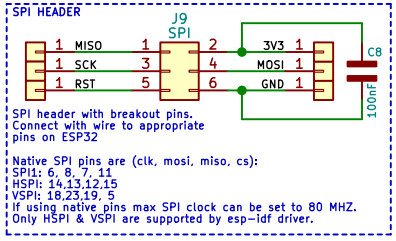

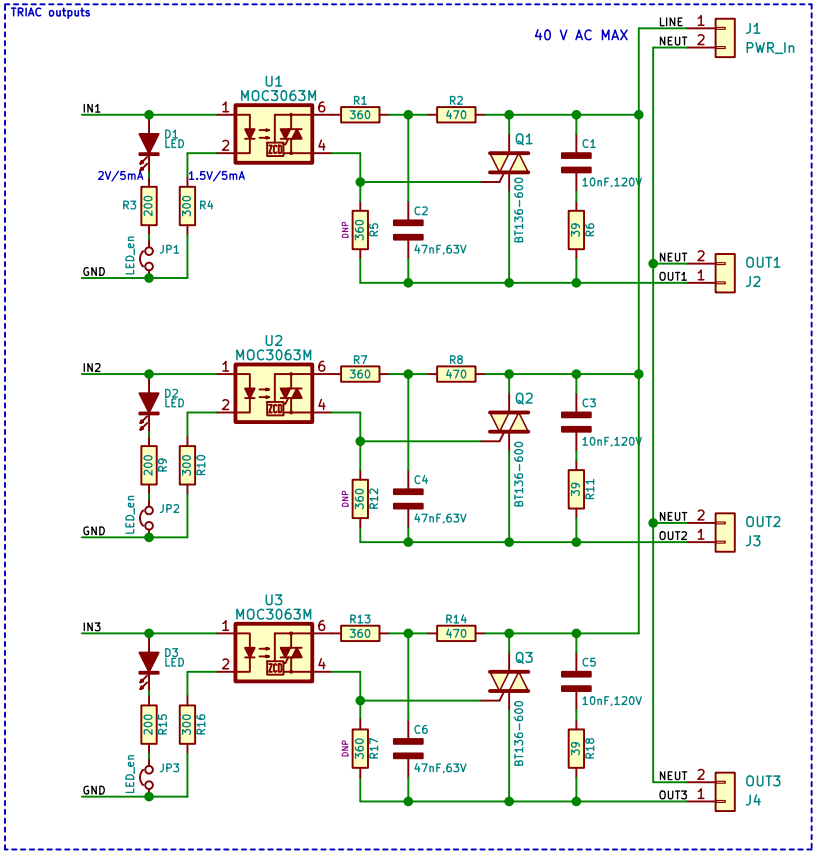

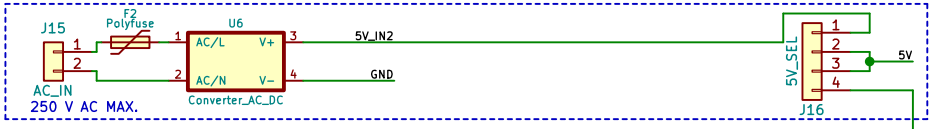

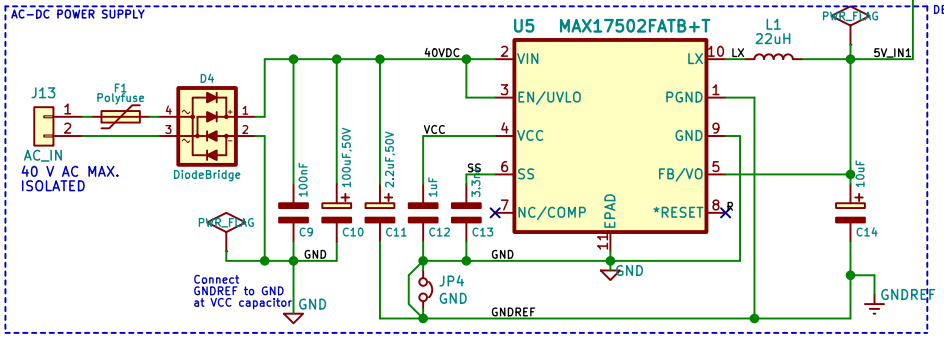

SC1
SC2
SC3
SC4

BOM :
1. ESP32 : Wemos Lolin
2. Opto : MOC3063SR2M
3. Triac : BT134-600E,127 (TH)
: BTA204S-600E,118 (SMD)
4. LED : LTST-C193KGKT-5A
5. Bridge Rectifier : MDB6S
6. PTC Fuse : 0ZCF0075AF2C
7. DC-DC Converter : MAX17502
8. 10nF/120V AC : LDEIB2100KA0N00
9. 47nF/63V AC : LDEEB2470KA0N00
10. Inductor L1 : ELL-8TP220MB
11. 100uF/50V Elco : HHXC500ARA101MJA0G
: EMZA630ADA101MJA0G

WyoLum		
Sheet: /		
File: wyostat.sch		
Title: WYOSTAT		
Size: A4	Date: 2018-03-12	Rev: rev 1
KiCad E.D.A. kicad no-vcs-found-67ccf7661ubuntu16.04.1		Id: 1/1