Adjustable-Height Table Mechanism

Daniel Kadyrov

December 8, 2015

Contents

1 Executive Summary **2**

2 Introduction **3**

3 Description of Final Design **4**

4 Results of Quantitative Analyses **6**

5 Summary and Conclusion **7**

6 Appendix **8**

6.1 Assembly Drawings 8

6.2 Detail Drawings 10

6.3 Calculations 16

6.3.1 Force Analysis 16

6.3.2 Power Screw Analysis 16

6.4 OEM Specification Sheets 17

List of Figures

1 Final Design 5

2 Final Design: Mechanism Skeleton 5

1 Executive Summary

This design focuses on a mechanism that uses scissor linkages in order to adjust the height of a table. Through a rotational power input by motor or human operator, this mechanism can translate the height of a table top from a fully collapsed position to a maximum height predetermined by its manufacturing.

In this version of the model, the dimensions are limited by the availability of parts by the manufacturer. With custom manufacturing, a variety of table sizes and height ranges can be achieved. This table design features a tabletop with a length of 14 inches and a width of 10.5 inches. The table reaches a maximum height of 7 inches. At collapse, this table can be flushed with the floor in order to provide space within a room or a workshop.

The mechanism works in the following way. A power input rotates the power screw, guiding a precision lead in a horizontal direction. Attached to the lead is a nut linkage that then delivers this horizontal motion to joints attached to shafts on either side of the lower table body. A pin of a scissor linkage is attached to this joint while the other is attached to either the lower or upper body. As the joint moves along the shaft, the pair of scissor linkages pivot about a pin at their midpoints. In this way, the rotational motion of the power transmission is converted to vertical motion of the tabletop.

This design features screws, leads, bearings and shafts provided by the manufacturer Thompson Linear. The bolts used are available from National Bolt and Nut corporation.

Force analysis was done on this model based on the maximum load from the weight of four average Americans and a factor of safety of 1.5. The maximum load the mechanism should support would be 1080 lbs. Since the dimensions of the table and linkages are able to change based on pre-manufacturing choices, analysis was only conducted on the mechanism parts. The power screw, bearings and lead were chosen with load ratings higher than the maximum load. The stresses within the power screw body were also calculated to ensure its durability.

2 Introduction

The design for this adjustable height table mechanism uses scissor linkages and a power screw in order to raise and lower a table top. The power transmission to turn the screw and change the height of the table in turn, can come from a motor or through a human powered lever. This mechanism can be used for a variety of table top sizes and weights as well as at different, predetermined, height ranges.

The design requirements for this mechanism was to translate rotational motion of the screw, powered externally through a motor or human, into linear motion by adjusting the height of the table top. The mechanism was to be able to support a maximum weight of four average humans throughout its motion. This would allow it to be used in its upright and collapsed positions in a variety of industries. In its collapsed position, it would be able to be flushed parallel with the ground, allowing for more space to used within a shop or office.

Since this mechanism will be used in settings with human operators, a design factor of 1.5 was used to ensure the safety of the users. The average weight of an American is 180 lbs. The resulting maximum load chosen for this mechanism is 1080 lbs.

3 Description of Final Design

Power is transmitted to a power screw supported by two bearings. As the power screw spins, a precision lead is moved horizontally between the bearings. The screw, lead, and bearings are manufactured by Thompson Linear. The bearings are attached to the assembly through $\frac{1}{4} - 20$ bolts (not shown), as specified by the manufacturer. The total length the lead can move is restricted by the bearing locations. In this model, the total length is restricted to 4.88 inches.

As the precision lead moves up the screw, it also moves the nut linkage that is attached to it through $\frac{1}{4} - 20$ bolts (not shown). The nut linkage translates this motion to joints on either side of the table. These joints are attached to the nut linkage and the scissor linkage through M10 bolts and are horizontally guided on a 60 case standard stainless steel shaft manufactured by Thompson Linear.

While one pin of the scissor linkage is attached on the bottom to a joint moving on the shaft, its counterpart is pinned on the table top through a M10 Bolt. The other pair of the linkage is connected in a similar way, however it is pinned to the lower body of the table and connects to a joint guided upon a shaft on the tabletop portion. This linkage pair pivot about their midpoint, connected by a M10 bolt and a spacer. As the joints move horizontally about their shaft, the motion is translated to vertical motion through the scissor linkages and adjusts the heigh of the table.

The final design includes a table top and body in order to demonstrate the application of the height-adjustment mechanism. Figure 1 shows the final design of the height-adjustable table mechanism in its upright and collapsed positions. Figure 2 shows the final design skeleton, highlighting the mechanism.

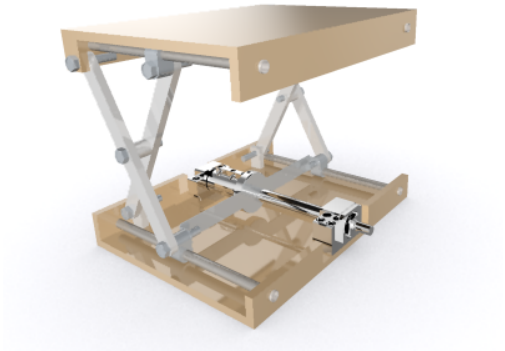

(a) Table in Upright Position

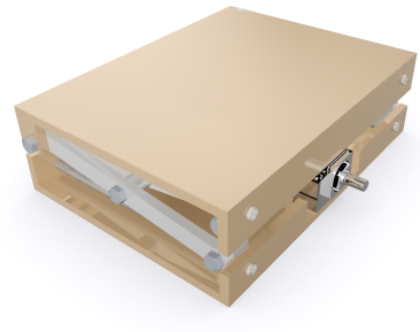

(b) Table in Collapsed Position

Figure 1: Final Design

(a) Mechanism in Upright Position

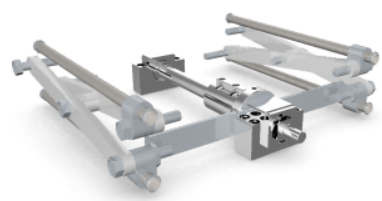

(b) Mechanism in Collapsed Position

Figure 2: Final Design: Mechanism Skeleton

The manufactured parts are listed below:

1. Thompson Linear Bearing: BK 7833362
2. Thompson Linear stainless steel, 60 case standard shaft
3. Thompson Linear Precision Lead: 5700974
4. Thompson Linear Lead Screw: .75 in
5. M10 x 2 Bolts: Available from National Bolt & Nut Corp
6. $\frac{1}{4} - 20$ Bolts: Available from National Bolt & Nut Corp

4 Results of Quantitative Analyses

Thompson Linear was chosen as the manufacturer for the power screw, bearing, precision lead assembly. A precision lead was chosen over a ball lead because it provides smoother, quiet motion as well as a higher load rating. The lead was chosen to be 5700974 with a maximum load rating of 1473 lbf and a diameter of .75 inches. The power screw was chosen with the same diameter offered by the manufacturer. Unfortunately, the maximum length that they provide, without custom manufacturing, is 6 inches. This limited the travel distance of the lead, which would then limit the height range of the table. The bearings to hold the power screw were chosen using a Thompson Linear recommendation tool. The bearings were chosen to be BK 7833362, fixed support. These bearings are able to support the maximum force applied by the lead as well as the torque necessary to rotate the screw. The stainless steel shaft manufactured by Thompson was chosen to be a in the 60 case standard series. This shaft will have to be custom manufactured.

The tabletop dimensions were chosen to be 14 inches by 10.5 inches due to the manufacturing constraints from the available power screw length. The length for which the precision lead can travel determines the starting and ending positions of the scissor linkage joints. The size of the scissor linkages had to then be adjusted in order to have them fold horizontally when the table would be in the collapsed position. This then affected the maximum height at which the table reached. Although the manufacturer size constraints affected the size of the design, it did not affect the loading it could support. With custom manufacturing, this mechanism would be able to accommodate a variety of table sizes and height ranges.

The thickness dimensions of the scissor linkages was chosen arbitrarily. As the size and height range of the table increases, the linkages will have to reflect these changes in their length and width in order to be able to raise and lower the table to the upright and collapsed positions. The material for the scissor linkage was chosen to be steel in order to accommodate custom manufacturing and load conditions.

Similar to the scissor linkages, the nut linkage also had an arbitrary thickness chosen, however calculation had to be made in order to ensure that it would not affect the starting and ending locations of the precision lead. As the table dimensions change, the nut linkage will also need to be adjusted in order to accommodate the different chosen height ranges.

Bolts were chosen based on manufacturing requirements.

5 Summary and Conclusion

This design aims to create an alternative height-adjusting table mechanism to a crank or pneumatics. Through the use of scissor linkages and a power screw, the rotational motion of a motor or human operated lever can be translated into the vertical change in height of the table. This allows for use in a variety of applications, support higher loads, and decrease costs.

This mechanism is reliable and can be altered to support a variety of table sizes and load requirements. The table is fully functional whether in its upright position or collapsed and flushed with the ground. In this model, the table dimensions are 14 inches by 10.5 and has a height range of up to 7 inches. This design can support a weight of four average Americans with a safety factor of 1.5.

6 Appendix

6.1 Assembly Drawings

ME 584 Project 3

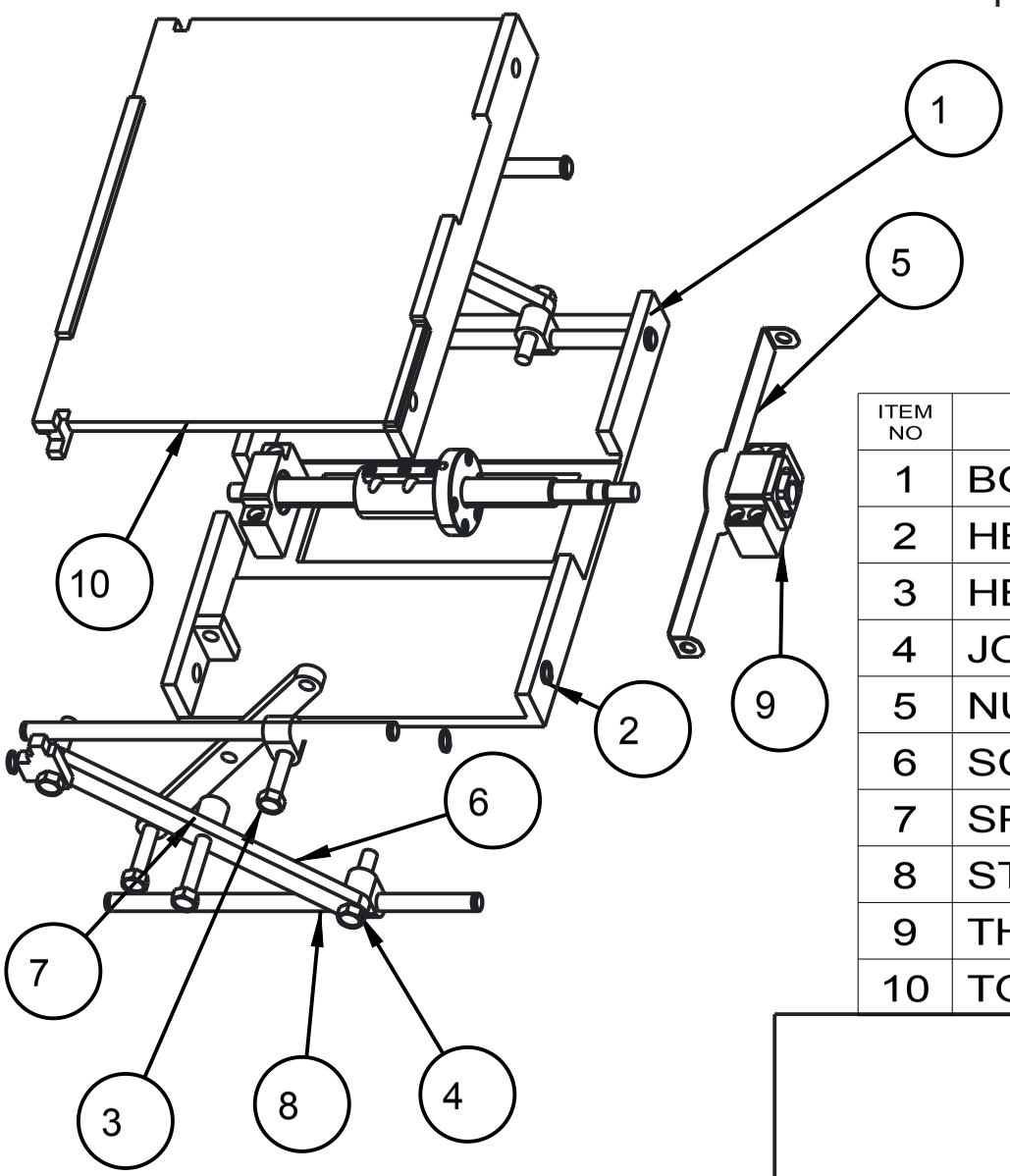

ITEM NO	PART NUMBER	QTY
1	BODY	1
2	HEAVY_DUTY_EXTERNAL_RETAINING_1	8
3	HEX_SCREW_AM_B18_6_7M_-_M10_X_2	10
4	JOINT_1	4
5	NUT_LINK_1	1
6	SCISSOR_LINK_1	4
7	SPACER_1	2
8	STAINLESSTEEL_SHAFT_1	4
9	THOMSON_LINEAR	1
10	TOP	1

Binghamton University
Mechanical Engineering Department

General Assembly

Unless otherwise shown; all tolerances are ± .01 of last decimal given

All dimensions In.

No.:

Scale: 19:96

DRWN by: D. Kadyrov

Date: 12/22/15

6.2 Detail Drawings

ME 584 Project 3

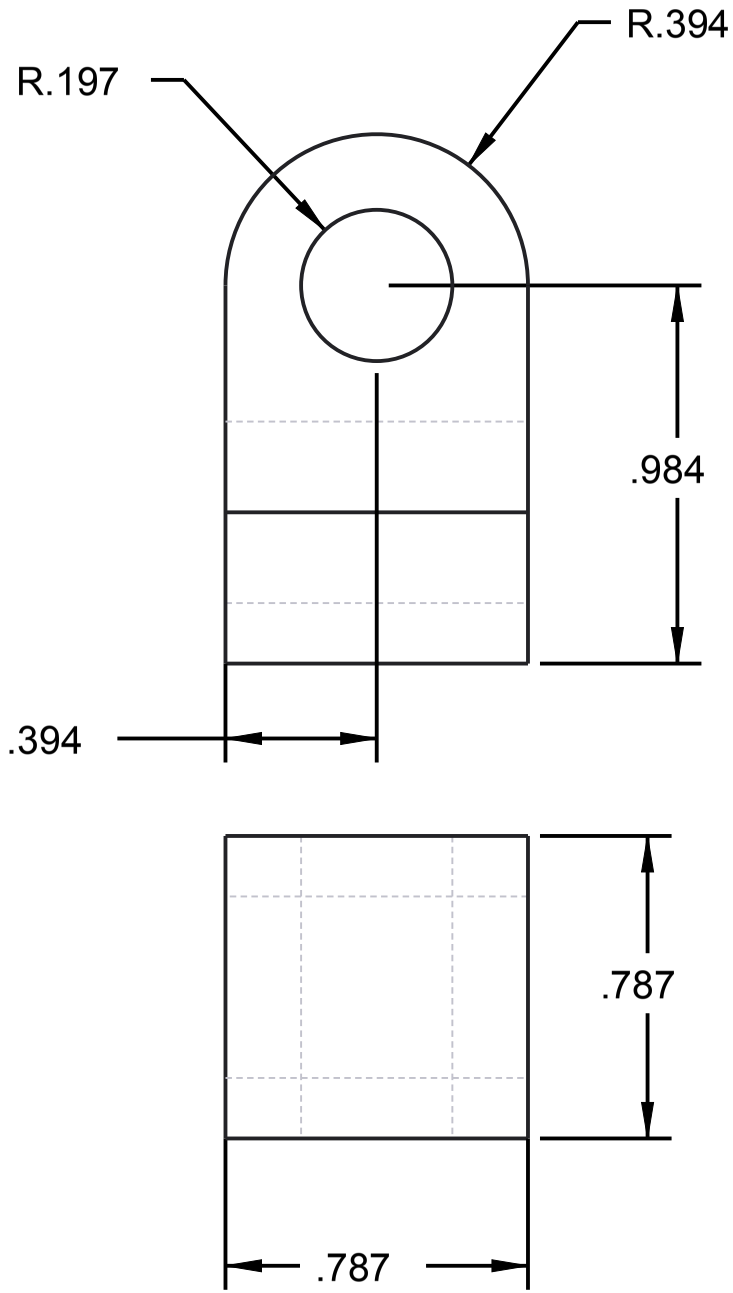

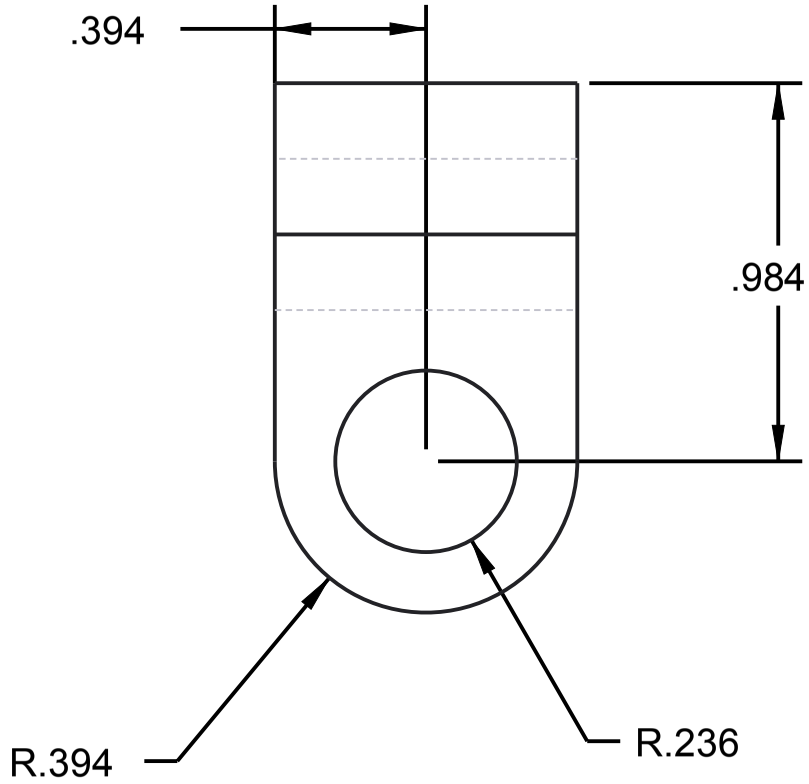

Binghamton University
Mechanical Engineering Department

Joint (Steel)

Unless otherwise shown; all tolerances are ± .01 of last decimal given

All dimensions In.

No.:	4	Scale:	2:1
DRWN by:	D. Kadyrov	Date:	12/22/15

ME 584 Project 3

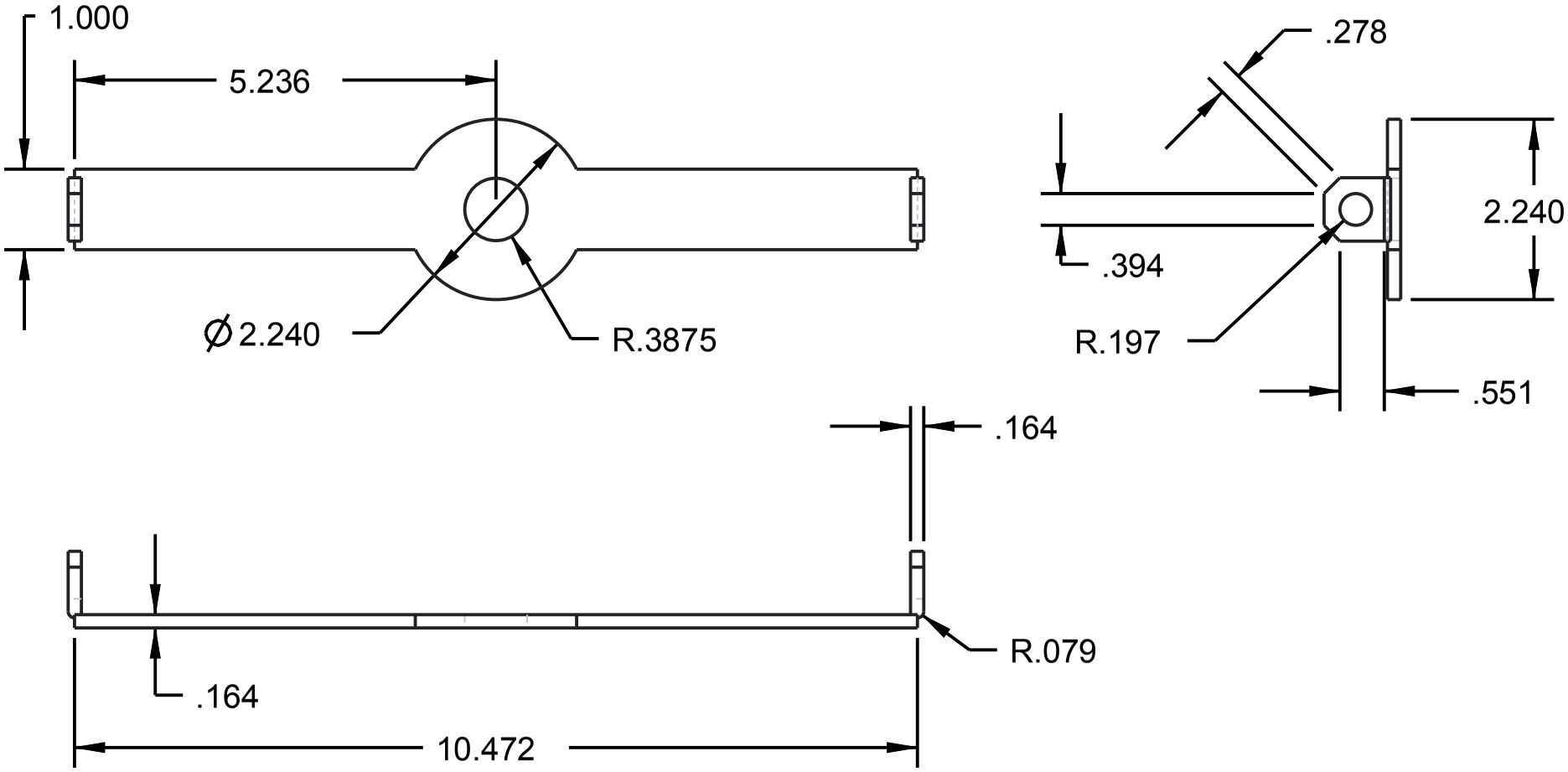

Binghamton University
Mechanical Engineering Department

Nut Link (Steel)

Unless otherwise shown; all tolerances are ± .01 of last decimal given

All dimensions In.

No.:	5	Scale:	1:2
DRWN by:	D. Kadyrov	Date:	12/22/15

ME 584 Project 3

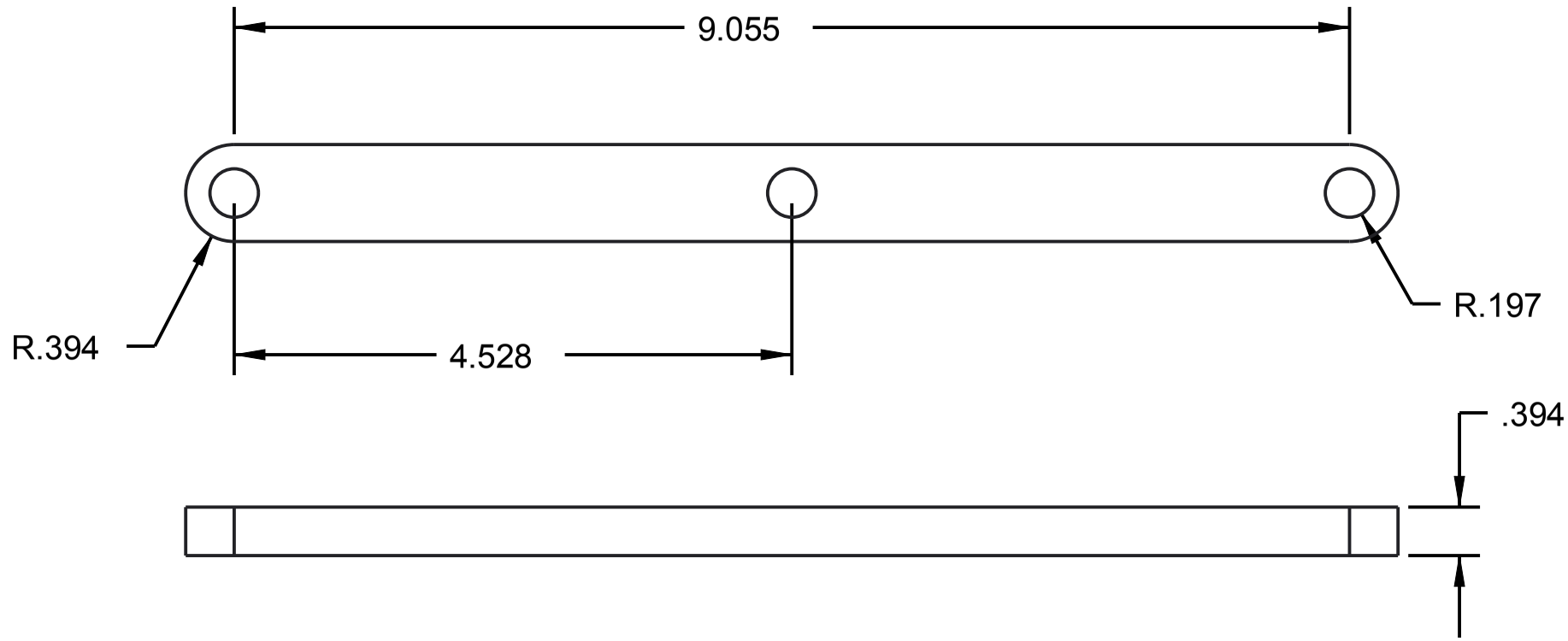

Binghamton University
Mechanical Engineering Department

Scissor Linkage (Steel)

Unless otherwise shown; all tolerances are ± .01 of last decimal given

All dimensions In.

No.:	6	Scale:	3:4
DRWN by:	D. Kadyrov	Date:	12/22/15

ME 584 Project 3

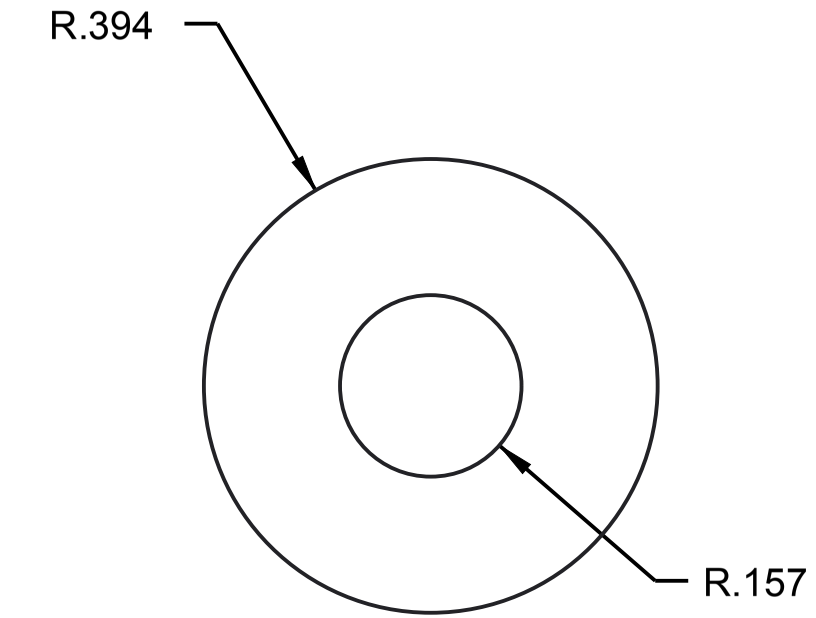

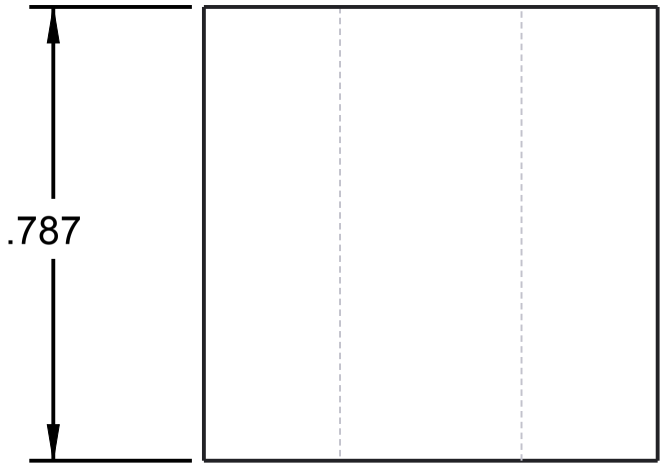

Binghamton University
Mechanical Engineering Department

Spacer (Steel)

Unless otherwise shown; all tolerances are ± .01 of last decimal given

All dimensions In.

No.:	7	Scale:	3:1
DRWN by:	D. Kadyrov	Date:	12/22/15

ME 584 Project 3

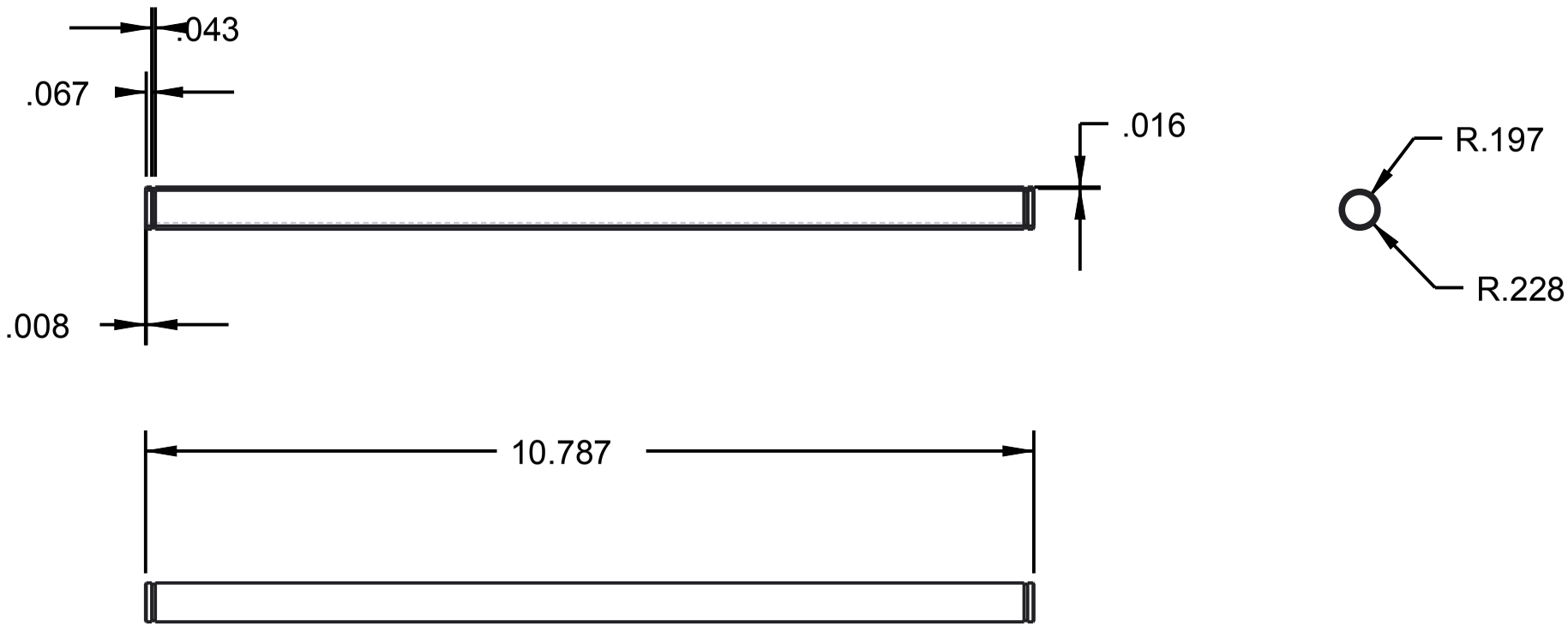

Binghamton University
Mechanical Engineering Department

StainLess Steel Shaft (Thompson Linear)

Unless otherwise shown; all tolerances are ± .01 of last decimal given

All dimensions In.

No.:	8	Scale:	1:2
DRWN by:	D. Kadyrov	Date:	12/22/15

6.3 Calculations

6.3.1 Force Analysis

The estimated maximum load was initially chosen to be 5 people standing on the table. Since the size of the table was scaled down, the maximum load will be chosen using 3 people instead. The average American weighs 180 lbs. A factor of safety of 1.5 was used.

$n_d = 1.5$
$F_{\text{total}} = 4(180) = 720$ lbs.
$F = F_t * n_d = (720)(1.5) = 1080$ lbs.

Although this force is split amongst 4 linkages, the power distributed on the power screw through the nut-link will be at a maximum of this total force distributed on either side. The total force, 1080 lbs., was used throughout the power screw analysis.

6.3.2 Power Screw Analysis

The diameter of the power screw, d_m, is chosen to be .75 inches. The pitch length, l is found to be .2 inches. The coefficient of friction, μ, for the Thomson Linear steel screws and precision bolts was given as .15. The required torque to raise the load was calculated using Equation 1:

$$T_R = \frac{Fd_m}{2}\left(\frac{l\cos(\alpha) + \mu\pi d_m}{\pi d_m \cos(\alpha) - \mu l}\right) = \frac{(1080)(.75)}{2}\left(\frac{.2\cos(20) + (.15)\pi(.75)}{\pi(.75)\cos(20) - .15(.2)}\right) = 100.386 \text{ lbs.} \cdot \text{in.} \tag{1}$$

The required torque to lower the load was calculated using Equation 2:

$$T_L = \frac{Fd_m}{2}\left(\frac{\mu\pi d_m - l\cos\alpha}{\pi d_m \cos\alpha + \mu}\right) = \frac{(1080)(.75)}{2}\left(\frac{(.15)\pi(.75) - (.2)\cos 20}{\pi(.75)\cos 20 + (.25)(.2)}\right) = 29.6 \text{ lbs.} \cdot \text{in.} \tag{2}$$

The nut linkage adds additional resistance as a thrust bearing collar load. The diameter of the collar was chosen to be .775 in. in order to clear the power screw. The required torque was calculated using Equation 3:

$$T_c = \frac{F\mu_c d_c}{2} = \frac{1080(.15)(.775)}{2} = 62.775 \text{ lbs.} \cdot \text{in.} \tag{3}$$

The torques required to raise and lower the table are found by adding the collar load torque to the torques found in Equation 1 and 2. These values were found to be 163 lbs.·in. and 93 lbs.·in., respectively.

The stresses in the screw body were calculated using Equation 4 and 5. The highest possible values were used.

$$\tau = \frac{16T}{\pi d_r^3} = \frac{16(163)}{\pi(.75)^3} = 1968 \text{ psi} \tag{4}$$

$$\sigma = \frac{4F}{\pi d_r^2} = \frac{4(1080)}{\pi(.75)^2} = 2445 \text{ psi} \tag{5}$$

The bearing stress and the threat bending stress at the root of the screw thread were found using Equation 6 and 7.

$$\sigma = \frac{2(0.38)F}{\pi d_m^2 p} = \frac{2(.38)(1080)}{\pi(.75)(.2)} = 1742 \text{ psi} \tag{6}$$

$$\tau = \frac{6(0.38)F}{\pi d_r n_t p} = \frac{6(.38)(1080)}{\pi(.75)(3)(.2)} = 1742 \text{ psi} \tag{7}$$

These loads are all under the maximum loads for the chosen bearings and power screw.

6.4 OEM Specification Sheets

Precision Plus Ball Screws — Inch Series

Lead Accuracy: ± .0005 in/ft

Preloaded, Round Ball Nut with Integral Flange and Wiper

- Precision machined for highly accurate and smooth running performance
- Long-lasting preload for minimal backlash and consistent stiffness
- Standard sizes stocked for quick delivery. Additional sizes are available as custom product.

Nominal Diameter (size)	Lead	Ball Screw and Nut Assembly P/N(1)(2)(3)	Ball Nut Details		Performance Data			Screw Specifications			
			Direction	No. of Return Tubes	Dynamic Load Capacity (C_{am})	Static Load Capacity (C_o)	Max. Axial Backlash	Major Diameter (max.)	Minor Diameter	Standard Length	Screw Weight
(in.)	(in.)				(lbf)	(lbf)	(in.)	(in.)	(in.)	(in.)	(lb/ft)
0.631	0.200	**7820396**	Right Hand	2	440	2,110	0.00	0.611	0.496	42	0.90
0.750	0.200	**5700974**	Right Hand	2	1,473	9,916	0.00	0.750	0.599	42	1.45
0.875	0.200	**7820397**	Right Hand	2	1,375	10,780	0.00	0.875	0.740	60	1.78
1.000	0.200	**5700975**	Right Hand	2	1,565	13,073	0.00	1.000	0.865	72	2.20
1.000	0.250	**7820477**	Right Hand	2	2,285	15,815	0.00	1.000	0.833	72	2.20
1.150	0.200	**5700976**	Right Hand	2	1,680	14,886	0.00	1.130	1.015	72	3.18
1.250	0.200	**5700977**	Right Hand	2	1,800	16,625	0.00	1.250	1.115	72	3.75
1.250	0.200	**7820830**	Left Hand	2	1,800	16,625	0.00	1.235	1.115	72	3.75
1.250	0.500	**7820399**	Right Hand	2	1,765	11,080	0.00	1.250	1.050	96	3.77
1.500	0.200	**7820375**	Right Hand	4	4,745	45,073	0.00	1.500	1.349	120	5.18
1.500	0.250	**7820965**	Right Hand	4	4,250	27,250	0.00	1.500	1.333	120	5.18
1.500	0.500	**7820401**	Right Hand	2	5,075	35,770	0.00	1.500	1.236	120	4.79
1.750	0.200	**5700979**	Right Hand	4	4,464	47,446	0.00	1.750	1.615	96	7.56
2.000	0.200	**7820402**	Right Hand	6	6,181	65,903	0.00	2.000	1.849	120	9.81
2.250	0.500	**7820484**	Right Hand	2	20,160	108,325	0.00	2.250	1.858	120	10.87
2.500	0.250	**7820483**	Right Hand	6	8,945	93,165	0.00	2.500	2.333	120	15.46

(1) All Precision Plus product is sold in matched sets as ball screw and nut assemblies.

(2) Dimensional information on bearing supports and standard end machining is available on page 152.

(3) Information on required lubrication is on page 231.

Bearing Supports Overview

Inch Series Ball Screws								
Dia. x Lead	BK	BF	FK	FF	QK	QF	MK	WK
0.500	7833360	7833368	7833377	7833384	7828282	7833291	7833685	-
0.631	7833361	7833369	7833378	7833385	7824154	7833256	7833686	-
0.750	7833362	7833370	7833379	7833386	7824155	7833259	7833687	-
0.875	7833363	7833371	7833380	7833387	7824156	7833262	-	7833595
1.000	7833364	7833372	7833381	7833388	7824157	7833265	7833690	7833596
1.171	7833364	7833372	7833381	7833388	7824157	7833265	7833690	7833596
1.150	7833365	7833373	7833382	7833389	7824158	7833268	-	7833597
1.250	7833365	7833373	7833382	7833389	7824158	7833268	-	7833597
1.500 x 0.473 & 1.000	7833365	7833373	7833382	7833389	7824158	7833268	-	7833597
1.500	7833366	7833374	7833383	7833390	7824159	7833270	-	7833599
1.750	7833367	7833375	-	-	7829554	7833273	-	7833602
2.000	7833367	7833375	-	-	7824160	7833276	-	-
2.250					7824160	7833276	-	-
2.500	-	-	-	-	7824161	7833279	-	-

Metric Ball Screws								
Dia. x Lead	BK	BF	FK	FF	QK	QF	MK	WK
12	7833391	7833398	7833405	7833411	7829546	7833292	7833700	-
16	7833392	7833399	7833406	7833412	7829547	7833282	7833701	-
20	7833393	7833400	7833407	7833413	7829548	7833283	7833702	-
25	7833394	7833401	7833408	7833414	7829549	7833284	7833703	7833614
32	7833395	7833402	7833409	7833415	7829550	7833285	-	7833615
40	7833396	7833403	7833410	7833416	7829551	7833286	-	7833617
50	7833397	7833404	-	-	7829552	7833287	-	7833621
63	-	-	-	-	7829553	7833288	-	-

Ball Splines								
Nominal Size	BK	BF	FK	FF	QK	QF	MK	WK
0.625	7833360	7833368	7833377	7833384	7828282	7833291	7833685	-
1.000	7833364	7833372	7833381	7833388	7824157	7833265	7833690	7833596
1.500	7833365	7833373	7833382	7833389	7824159	7833270	-	7833597
2.000	7833367	7833375	-	-	7829554	7833273	-	7833602
2.500	-	-	-	-	7824161	7833279	-	-

How to Select an Inch Series Ball Screw Assembly

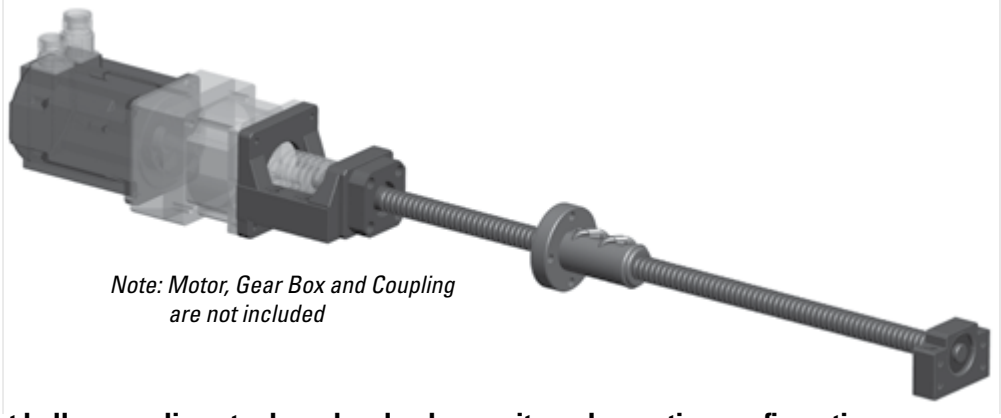

Step 1 - Select ball screw diameter based on load capacity and mounting configuration

- Table below indicates maximum axial load that selected ball nut diameter and end configuration can support
- Select a ball screw diameter / end support configuration with a load capacity exceeding application requirement

Table 1 - End Support Axial Load Capacity (lbs)

Ball Screw Dia.	BK - BK	BK - BF	FK - FK	FK - FF	MK - BK	MK - BF	WK - WK
0.500 in	860	430	860	430	860	430	-
0.631 in	957	478	957	478	957	478	-
0.750 in	1,058	529	1,058	529	1,058	529	-
0.875 in	1,821	910	1,821	910	-	-	9,877
1.000 in	1,887	944	2,588	1,294	2,238	1,294	9,877
1.150 in	3,126	1,563	3,126	1,563	-	-	12,831
1.500 in	4,140	2,070	4,140	2,070	-	-	13,139
2.000 in	8,086	4,043	-	-	-	-	14,330

Step 2 - Select lead

- Select preload if zero lash is required
- Select lead based on required speed
- Linear speed (in/min) = (RPM) x (Lead)

Step 3 - Verify life requirement of ball nut and end support

- Calculate life of ball screw assembly using $L_{10} = (C_{am} / \text{Load})^3$ million inches
- Calculate life of end supports using $L_{10} = (C_{am} / \text{Load per support})^3$ million revolutions

i.e. : Divide load by 2 if using 2 BK-BK, FK-FK, MK-BK, or WK-WK.

Table 2 - Ball Nut Part Number

Dia. x Lead	Standard Nut Part Number	Preload Nut Part Number	Maximum Screw Length (in)
.500 x .200	8105-448-013	8105-448-008	72.000
.500 x .500	8105-448-014	-	72.000
.631 x .200	8106-448-022	8106-448-012	144.000
.631 x 1.000	7826713	7827531	96.000
.750 x .200	8107-448-018	8107-448-025	144.000
.750 x .500	8107-448-014	8107-448-011	144.000
.875 x .200	5708277	-	144.000
1.000 x .250	8110-448-055	5704167	288 / 240
1.000 x .500	8110-448-022	8110-448-016	288.000
1.000 x 1.000	8110-448-086	-	288.000
1.150 x .200	8111-448-006	8111-448-004	288.000
1.500 x .250	7833233	7833234	240.000
1.500 x .473	5707513	-	240.000
1.500 x .500	8115-448-016	8115-448-006	288.000
1.500 x 1.000	5708280	5700698	240.000
1.500 x 1.875	5707654	5704272	240.000
1.500 x 2.000	8115-448-056	-	288.000
2.000 x .500	8120-448-011	8120-448-006	288.000
2.000 x 1.000	8120-448-021	8120-448-019	288.000

Table 3 - Component Dynamic Capacity

Dia. x Lead	Standard Nut C_{am} (lb)	Preload Nut C_{am} (lb)	BK Support C_{am} (lb)	FK / MK Support C_{am} (lb)	WK Suport C_{am} (lb)
.500 x .200	1,200	1,200	430	430	-
.500 x .500	929	-	430	430	-
.631 x .200	800	800	478	478	-
.631 x 1.000	578	578	478	478	-
.750 x .200	950	950	529	529	-
.750 x .500	3,450	3,450	529	529	-
.875 x .200	1,942	-	910	910	5,980
1.000 x .250	1,612	1,612	1,656	2,270	5,980
1.000 x .500	3,950	3,950	1,656	2,270	5,980
1.000 x 1.000	2,400	-	1,656	2,270	5,980
1.150 x .200	2,400	2,400	2,742	2,742	9,105
1.500 x .250	4,198	4,198	3,632	3,632	9,667
1.500 x .473	10,050	-	3,632	3,632	9,667
1.500 x .500	14,513	14,513	3,632	3,632	9,667
1.500 x 1.000	8,250	8,250	3,632	3,632	9,667
1.500 x 1.875	7,242	7,242	3,632	3,632	9,667
1.500 x 2.000	7,600	-	3,632	3,632	9,667
2.000 x .500	18,500	18,500	7,093	-	11,691
2.000 x 1.000	21,200	21,200	7,093	-	11,691