Power Transmission - Snowmobile Track Drive

Daniel Kadyrov

December 8, 2015

Contents

1 Force Analysis **2**
1.1 Horizontal Reactions (XY Plane) . . . 2
1.2 Vertical Reactions (YZ Plane) . . . 3
1.3 Torque . . . 3

2 Shaft Design **4**
2.1 Shaft Diameters . . . 4

3 Bearings **5**
3.1 RPM . . . 5
3.2 Bearing Selection . . . 5
3.3 Mounting . . . 6
3.4 Lubrication . . . 6

4 Keys **6**
4.1 Track Sprocket Key . . . 6
4.2 Chain Sprocket Key . . . 6

5 Chain Belt and Sprocket **7**
5.1 Chain Sprocket . . . 7
5.2 Lubrication . . . 7

6 Stress Analysis **8**

7 Appendix **10**

List of Figures

1 XY Loading, Shear, and Moment Diagram . . . 2
2 YZ Loading, Shear, and Moment Diagram . . . 3
3 Torque Diagram . . . 3
4 Table of Minimum Shaft Diameters . . . 4
5 Shaft Layout . . . 5
6 Von Mises Stress Calculation . . . 8
7 Defleciton . . . 8
8 Timken - Four Flanged Unit Ball Bearing Detailed Drawing . . . 10
9 Timken - Four Flanged Unit Ball Bearing Catalog . . . 11
10 Timken - Lubrication Type . . . 12
11 Timken - Lubrication Amount . . . 12
12 Martin - Sprocket . . . 13

1 Force Analysis

Force from Chain: $F_c = 2500\,\mathrm{N} = 2500\sin(30)\hat{\imath} + 2500\cos(30)\hat{k}$
Force from Track Sprockets: $F_T = 1000\,\mathrm{N} = T_1 + T_2$, $T_1 = T_2 = 500\,\mathrm{N}$

1.1 Horizontal Reactions (XY Plane)

$\sum F_x = A_x + T_1 + T_2 + B_x - F_c\hat{\imath} = A_x + 1000 + B_x - 2500\sin(30) = 0$
$A_x + B_x = 250\,\mathrm{N}$

$\sum M_{x,A} = T_1(.05) + T_2(.35) + B_x(.4) - F_{c,x}(.46) = 500(.05) + 500(.35) + B_x(.4) - 2500\sin(30)(.46) = 0$
$B_x = 937.5\,\mathrm{N}$
$A_x = -687.5\,\mathrm{N}$

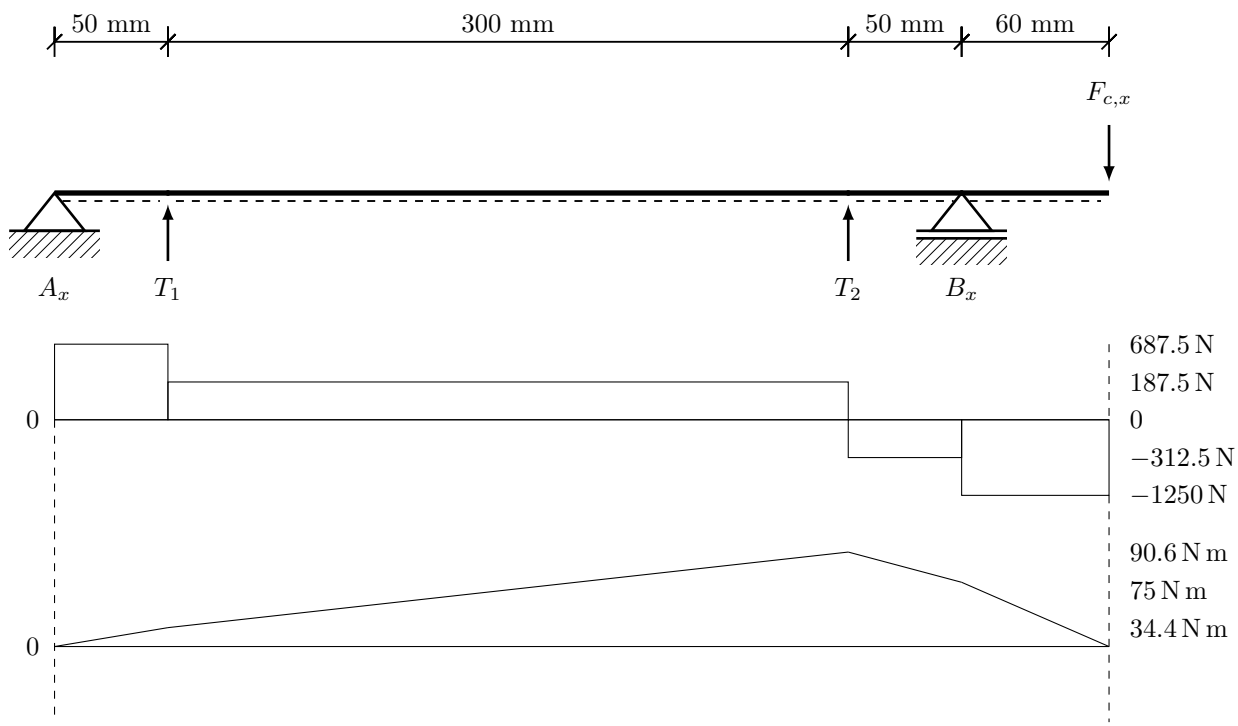

Figure 1: XY Loading, Shear, and Moment Diagram

1.2 Vertical Reactions (YZ Plane)

$\sum F_z = A_z + B_z - F_c\hat{k} = A_z + B_z - 2500\cos 30 = 0$
$A_z + B_z = 2165\,\mathrm{N}$

$\sum M_{z,A} = F_c\hat{k}(y_{F_c,z}) - B_z(y_{B,z}) = 2500\cos 30(0.46\,\mathrm{mm}) - B_z(40\,\mathrm{mm}) = 0$
$B_z = 2489.8\,\mathrm{N}$
$A_z = -324.76\,\mathrm{N}$

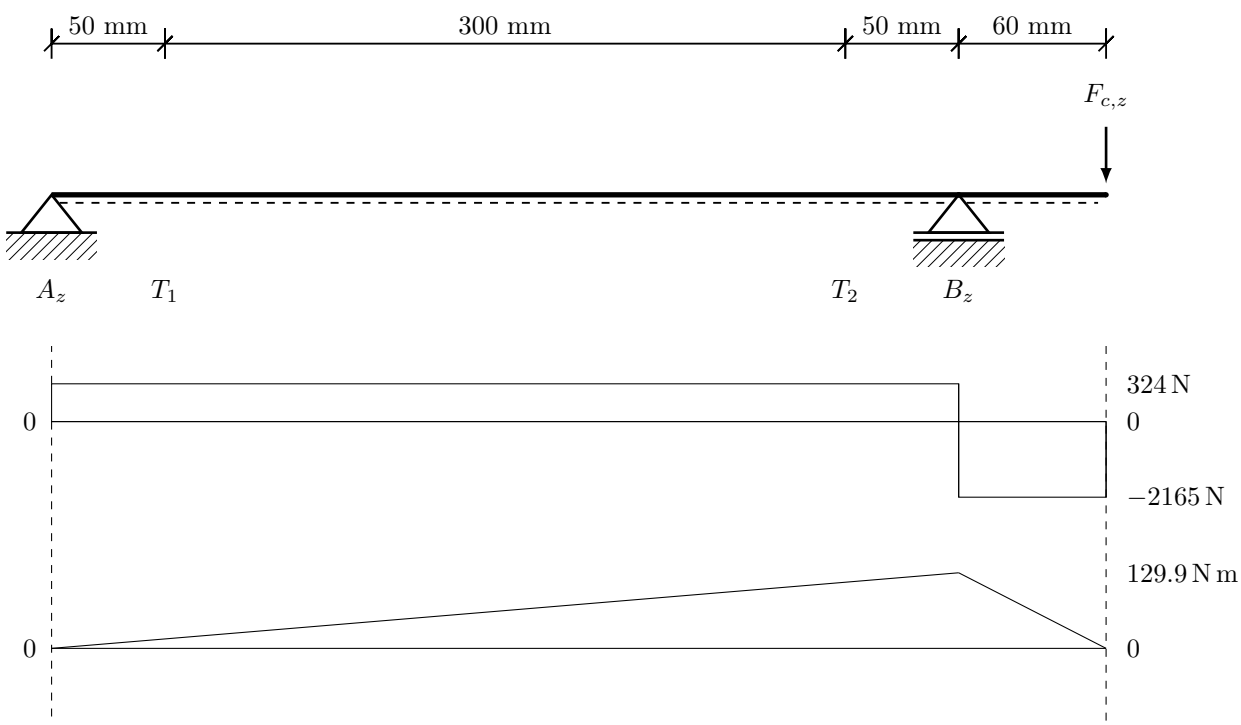

Figure 2: YZ Loading, Shear, and Moment Diagram

1.3 Torque

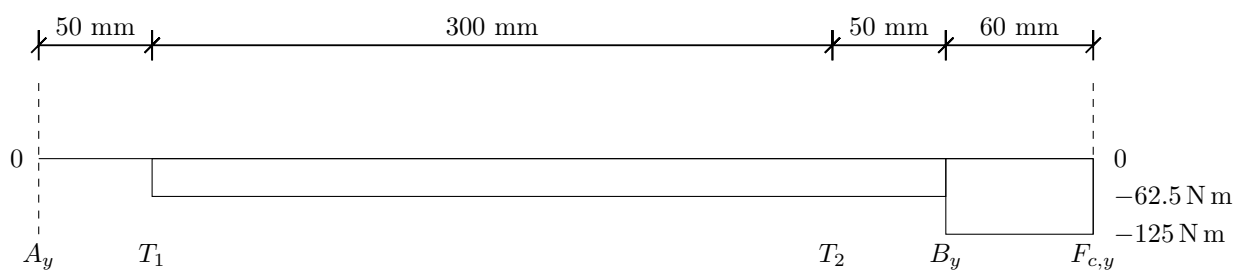

Figure 3: Torque Diagram

2 Shaft Design

2.1 Shaft Diameters

The shear, moment, and torque diagrams provide information on the maximums within each part of the shaft. By converting these forces into stresses and finding the resulting on Mises stress allowed for the minimum diameters of the different shaft sections to be found. The bending stress in the i direction is described by the following formula:

$$\sigma_i = \frac{32M_i}{\pi d^3} \tag{1}$$

Here, M is the moment and d is the diameter of the shaft section. The torsional stress is given by the following formula where T is the torque.

$$\tau = \frac{16T}{\pi d^3} \tag{2}$$

The Von Mises stress allows these stresses to be combined into one resultant quantitative number:

$$\sigma_{\mathrm{VM}} = \sqrt{\frac{1}{2}[(\sigma_{xx} - \sigma_{yy})^2 + (\sigma_{yy} - \sigma_{zz})^2 + (\sigma_{zz} - \sigma_{xx})^2] + 3(\tau_{xy}^2 + \tau_{yz}^2 + \tau_{zx}^2)} \tag{3}$$

Since our system only has stress in the x and z directions, the equation was simplified to:

$$\sigma_{\mathrm{VM}} = \sqrt{\sigma_x^2 + \sigma_z^2 - \sigma_x\sigma_z + 3\tau_{xz}^3}$$

The Von Mises stress can be set equal to the yield stress, S_Y, and divided by the factor of safety, n_d in order to find the stress at which the design will fail:

$$\sigma_{\mathrm{VM}} = \frac{S_Y}{n_d} \tag{4}$$

Setting the two Von Mises formulas, Equation 3 and Equation 4, equal to each other and solving for the diameter yields the following relationship:

$$d^3 = \frac{16n_d}{\pi S_y}\sqrt{4M^2 + 3T^2} \tag{5}$$

Using Equation 5 allowed to solve for the minimum diameters for the four different sections of the shaft. At each section, the maximum moment and torque were found using the force diagrams. The chosen material of the shaft was normalized AISI 4130 steel, also known as chromoly because its common use in the automobile industry and weather resistant properties. The yield stress, S_Y, of material is 436 MPa [1].

The factor of safety for this design was chosen to be 3 because although the material is reliable, the weather conditions it might be exposed to could be severe. The following table shows the computed minimum diameters for the four sections of the shaft.

	Bearing A	**Track**	**Bearing B**	**Chain C**
M_x (N m)	17.19	90.63	90.63	64.95
M_z (N m)	8.119	121.8	129.9	37.50
M (N m)	19.01	151.8	158.4	74.99
T (N m)	0	125	125	125
d (m)	0.011	0.0236	0.02378	0.02098
d (mm)	11.0	23.56	23.78	20.98

Figure 4: Table of Minimum Shaft Diameters

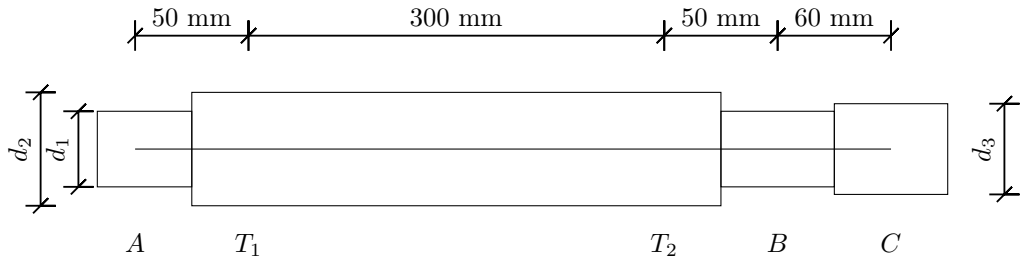

Figure 5: Shaft Layout

3 Bearings

3.1 RPM

The maximum revolutions per minute (RPM) of the shaft was calculated using the given information about the engine. The maximum engine output was given as 20 kW at $72\,\mathrm{km\,h^{-1}}$ which is converted to $20\,\mathrm{m\,s^{-1}}$.

$$\omega = \frac{v}{\pi d} = \frac{20\,\mathrm{m\,s^{-1}}}{\pi(0.250\,\mathrm{m})} = 1528 \text{ RPM} \tag{6}$$

3.2 Bearing Selection

The type of bearings was chosen to be cast-iron four flanged unit ball bearings. Their bonded seal design allow for wet and dirty environment the snowmobile will encounter. The snowmobile might take excessive forcing and the self-aligning spherical diameters will compensate if the shaft becomes misaligned. The snowmobile was designed with a time frame of 5 hour use per day, 5 days a week. Equation 8 calculates the amount of cycles the bearings should last.

$$60\frac{\text{min}}{\text{hour}} \cdot 5\frac{\text{hours}}{\text{day}} \cdot 5\frac{\text{days}}{\text{week}} \cdot 52\frac{\text{weeks}}{\text{year}} \cdot 10 \text{ years} \cdot 1528 \text{ RPM} = 953,472,000 \text{ cycles} = 9.53 \cdot 10^8 \text{ cycles} \tag{7}$$

The load rating for ball bearings was computed using the number of cycles in the following relationship:

$$9.53 \cdot 10^8 = (\frac{C_n}{P_r})^3(10^6) \tag{8}$$

Where P_r is the equivalent radial or combined load. Rewritten with the system loads and solved for the dynamic load rating:

$$9.53 \cdot 10^8 = (\frac{C_1}{760.35\,\mathrm{N}})^3(10^6) \rightarrow C_1 = 7482.5\,\mathrm{N}$$

$$9.53 \cdot 10^8 = (\frac{C_2}{2500\,\mathrm{N}})^3(10^6) \rightarrow C_2 = 24\,602\,\mathrm{N}$$

The bearings should have an inner diameter larger than 11 mm and 23.78 mm, respectively, and be able to support a dynamic load of at least 24 602 N.

The bearing was chosen to be **Timken part No. UCF207-23**. The required shaft diameter for this bearing is 34.92 mm which is higher than the minimum diameter of 23.78 mm. The dynamic load for this bearing is 25.7 kN which is higher than the maximum load of 24.6 kN. The width of the bearing and its housing is 44.4 mm, less than the given 50 mm distance between the bearing and the track sprocket [2].

A detailed drawing of the bearing is shown in Figure 8. The Timken catalog for four flanged unit ball bearings is shown in Figure 9. Both figures are available within the Appendix.

3.3 Mounting

Timken specifies that UCF207-22 is mounted with M12 bolts. The bolts were chosen to be from **Westfield Fasteners, DIN 931 M12 bolts**. The seals are included within the UCF207-22 bolt assembly.

3.4 Lubrication

Timken bearings are pre-lubricated and recommended to be re-lubricated once a month using polyuria thickener. The specification sheets can be seen in Figures 10 and 11 within the Appendix.

4 Keys

The material chosen for the shaft keys would have to yield before the shaft. The material was chosen to be normalized AISI 1040 steel with a yield strength of 374 MPa (54 kpsi) [1]. Equation 10 solves for the length of the key, L, using torque, T, the yield strength S_Y, the diameter of the shaft, d, and the width of the key:

$$L = \frac{4n_d T}{S_y d W} \tag{9}$$

4.1 Track Sprocket Key

The shaft diameter at the track sprocket was chosen to be 60 mm because it is larger than the minimum 23.56 mm. Converted to inches, this becomes 2.36 in. From Shigley, Table 7-6, the width, height and keyway depth were then selected to be $\frac{5}{8}$ in., $\frac{7}{16}$ in., and $\frac{7}{32}$ in., respectively.

$$L = \frac{4(3)(1106.5)}{(54000)(2.36)(\frac{5}{8})} = 0.1667 \text{ in.} = 4.23\,\text{mm} \tag{10}$$

The value for the length was chosen to be 4.23 mm because it was under the given 300 mm length of the shaft section.

4.2 Chain Sprocket Key

The shaft diameter at the chain sprocket was chosen to be 31.75 mm because it is larger than the minimum 20.98 Converted to inches, this becomes 1.25 inches. The width, height and depth of the key were selected to be $\frac{1}{4}$ in., $\frac{3}{16}$ in., and $\frac{3}{32}$, respectively.

$$L = \frac{4(3)(1106.5)}{(54000)(1.25)(\frac{1}{4})} = 0.787 \text{ in.} = 20\,\text{mm} \tag{11}$$

The value for the length was chosen to be 25 mm because it was above the minimum key length and under the given 60 mm length of the shaft section.

5 Chain Belt and Sprocket

The load classification was chosen to be moderate shock and the type of input power is a combustion engine. The service factor, K_s, was determined to be 1.4. A design factor, n_d, of 1.1 was chosen because the motor operate in dirty surroundings at cold temperatures. The design power, H_d, was calculated using the Equation 14, where the nominal power, H_{nom}, was converted from 20 kW to 26.8 hp .

$$H_d = H_{\text{nom}} K_s n_d = (26.8 \text{ hp})(1.4)(1.1) = 41.3 \text{ hp} \tag{12}$$

5.1 Chain Sprocket

The chain sprocket diameter was given as 100 mm which was converted to 3.94 in. The chosen sprocket was **Martin D40B23H**. This sprocket has 23 teeth and is for an **ANSI No. 40** chain. Using this sprocket will require four strands to be used in order to support the required RPM and design power. Using linear extrapolation, the power rating for a single strand ANSI No. 40, 23 toothed sprocket at 1528 RPM was calculated to be 15 hp. For four strands, this power rating was multiplied by 3.3 to become 49.5 hp which was above the design horsepower.

Next the speed ratio was calculated using the engine power output:

$$n = \frac{9.5488(\text{Power})}{T} = \frac{9.5488(2000)}{125} = 1528 \text{ RPM} \tag{13}$$

The speed ratio is 1:1. Both chain sprockets will have the same number of teeth. The Martin sprocket catalog is available in Figure 12, within the Appendix.

5.2 Lubrication

For this RPM and power rating, Type C lubrication is required.

6 Stress Analysis

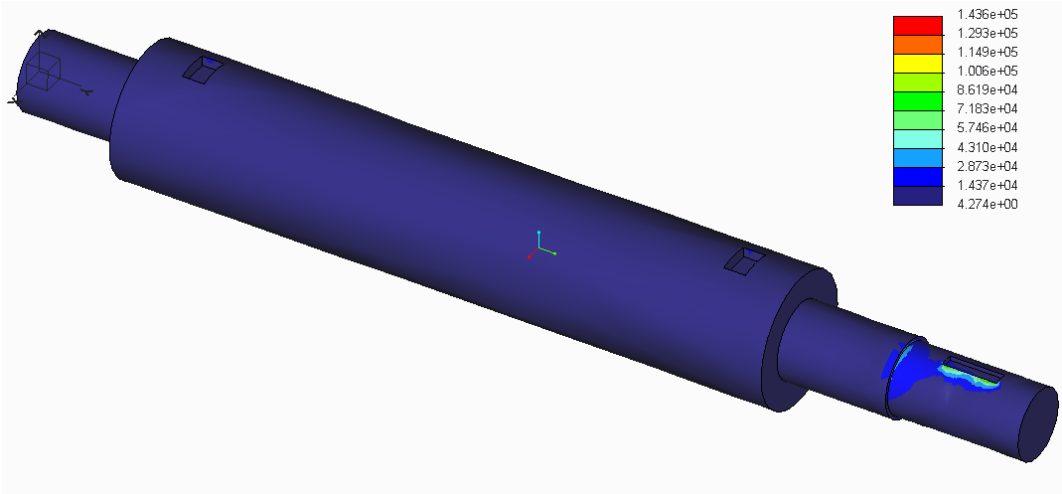

Figure 6: Von Mises Stress Calculation

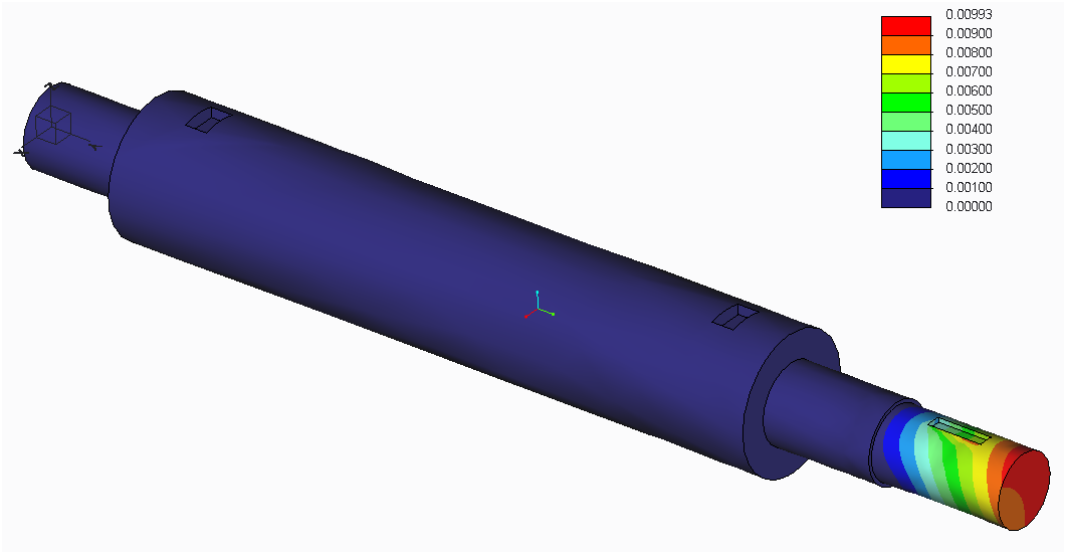

Figure 7: Defleciton

References

[1] R. Budynas, J. Nisbett and J. Shigley, Shigley's Mechanical Engineering Design

[2] Timken Ball Bearing Housed Units. Timken, 2015, p. 12.

7 Appendix

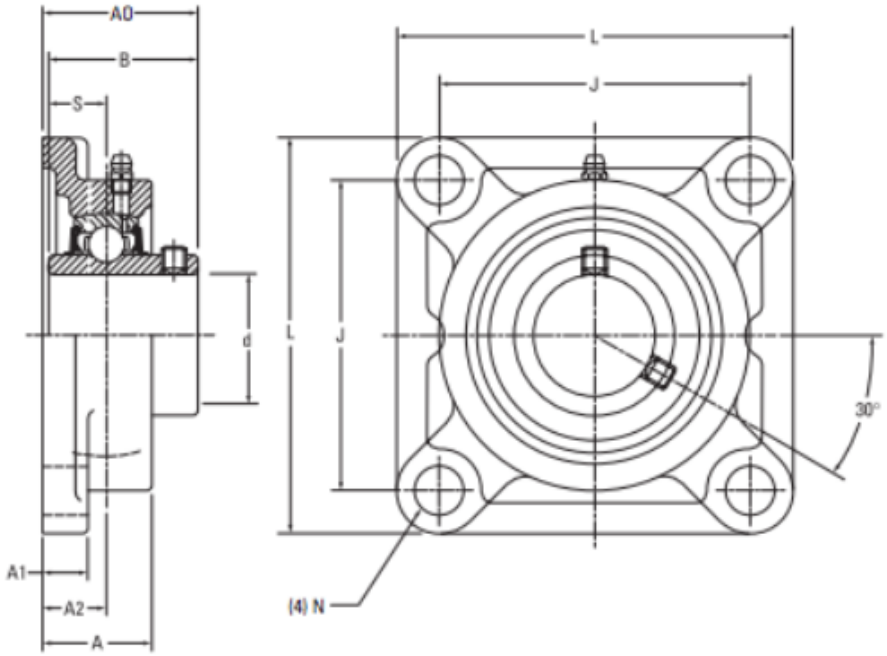

Figure 8: Timken - Four Flanged Unit Ball Bearing Detailed Drawing

Shaft Dia. d		Four-Bolt Flange Designation	Bearing Designation	Basic Load Ratings Dynamic C_r	Basic Load Ratings Static C_{0r}	Dimensions L	J	A1	A	A0	S	B	A2	N	Bolt Size	Weight
mm	in.			kN lbs.	kN lbs.	mm in.	mm in.	mm in.	mm in.	mm in.	mm in.	mm in.	mm in.	mm in.	mm in.	kg lbs.
12		UCF201	UC201	12.8 2878	6.65 1495	86 3 3/8	64 2 33/64	11 7/16	25.5 1	33.3 1 5/16	12.7 0.500	31 1.220	15 19/32	12 15/32	M10 3/8	0.6 1.4
	1/2	UCF201-8	UC201-8													
15		UCF202	UC202													
	5/8	UCF202-10	UC202-10													
17		UCF203	UC203													
	3/4	UCF-204-12	UC204-12													
20		UCF-204	UC204													
	7/8	UCF205-14	UC205-14	14.0 3147	7.85 1765	95 3 3/4	70 2 3/4	13 1/2	27 1 1/16	35.8 1 13/32	14.3 0.563	34.1 1.343	16 5/8	12 15/32	M10 3/8	0.8 1.8
	15/16	UCF205-15	UC205-15													
25		UCF205	UC205													
	1	UCF205-16	UC205-16													
	1 1/8	UCF206-18	UC206-18	19.5 4384	11.3 2540	108 4 1/4	83 3 17/64	13 1/2	31 1 7/32	40.2 1 19/32	15.9 0.626	38.1 1.500	18 45/64	12 15/32	M10 3/8	1.2 2.6
30		UCF206	UC206													
	1 3/16	UCF206-19	UC206-19													
	1 1/4	UCF206-20	UC206-20													
	1 1/4	UCF207-20	UC207-20	25.7 5778	15.4 3462	117 4 19/32	92 3 5/8	15 19/32	34 1 11/32	44.4 1 3/4	17.5 0.689	42.9 1.689	19 3/4	14 35/64	M12 7/16	1.5 3.3
	1 5/16	UCF207-21	UC207-21													
	1 3/8	UCF207-22	UC207-22													
35		UCF207	UC207													
	1 7/16	UCF207-23	UC207-23													
	1 1/2	UCF208-24	UC208-24	29.1 6542	17.8 4002	130 5 1/8	102 4 1/64	15 19/32	36 1 13/32	51.2 2 1/32	19 0.748	49.2 1.937	21 53/64	16 5/8	M14 1/2	1.9 4.2
	1 9/16	UCF208-25	UC208-25													
40		UCF208	UC208													
	1 5/8	UCF209-26	UC209-26	34.1 7666	21.3 4788	137 5 13/32	105 4 9/64	16 5/8	38 1 1/2	52.2 2 1/16	19 0.748	49.2 1.937	22 55/64	16 5/8	M14 1/2	2.2 4.9
	1 11/16	UCF209-27	UC209-27													
	1 3/4	UCF209-28	UC209-28													
45		UCF209	UC209													

Figure 9: Timken - Four Flanged Unit Ball Bearing Catalog

TABLE A-6. STANDARD BALL-BEARING LUBRICATION

Bearing Type	Grease Type	Grease Temperature Range
Radial bearings (double shielded, and single and double shielded)	Polyurea thickener Petroleum oil	-34.44° C to +135° C (-40° to +275° F)
Wide-inner-ring ball bearings (contact seal types)	Polyurea thickener Petroleum oil	-34.44° C to +135° C (-40° to +275° F)
Wide-inner-ring ball bearings (labyrinth seal types)	Synthetic thickener Synthetic hydrocarbon fluid	-53.89° F to +162.75° C (-65° F to +350° F)

NOTE: Open-type bearings and single-shielded types are not prelubricated. They have a rust-preventative coating only and must be lubricated by the customer or end-user before operation.

Figure 10: Timken - Lubrication Type

GENERAL RELUBRICATION SUGGESTIONS FOR GREASED BEARINGS [1]

TABLE 1

CONDITION	RELUBRICATION INTERVAL
Indoor service	Not required
Outdoor service	Two/three times per year
Severe outdoor exposure	Once a month
High contamination/washdown	Once a week

[1] As a guideline, relubricate until the first indication of grease is observed purging from the bearing.

8

Figure 11: Timken - Lubrication Amount

No. 40-2
½" Pitch

All Steel Stock Sprockets

Martin

Double - Type B

No. Teeth	Catalog Number	Outside Diameter	Type	Bore (inches) Stock	Bore (inches) Rec. Max.	Hub (inches) Dia.	Hub (inches) Length Thru	Weight Lbs. (Approx.)
11	D40B11H	2.000	B	⅛	¾	1 5/16*	1⅛	0.62
12	D40B12H	2.170	B	⅛	7/8	1 5/16*	1⅛	0.76
13	D40B13H	2.330	B	⅛	1	1⅛	1⅛	0.86
14	D40B14H	2.490	B	⅛	1⅛	1 11/16	1⅛	1.08
15	D40B15H	2.650	B	⅛	1⅛	1 13/16	1⅛	1.24
16	D40B16H	2.810	B	⅜	1⅜	2	1⅛	1.42
17	D40B17H	2.980	B	⅜	1 7/16	2⅛	1⅛	1.64
18	D40B18H	3.140	B	⅜	1½	2 5/16	1⅛	1.92
19	D40B19H	3.300	B	⅜	1⅜	2½	1⅛	2.22
20	D40B20H	3.460	B	⅜	1¾	2⅝	1⅜	2.64
21	D40B21H	3.620	B	⅜	1¾	2⅝	1⅜	2.94
22	D40B22H	3.780	B	⅜	1¾	2⅝	1⅜	3.18
23	D40B23H	3.940	B	⅜	2	3	1⅜	3.52
24	D40B24H	4.100	B	⅜	2⅛	3⅛	1⅜	4.04
25	D40B25H	4.260	B	⅜	2⅛	3⅛	1⅜	4.26
26	D40B26	4.420	B	⅜	2⅛	3⅛	1⅜	4.48
30	D40B30	5.060	B	¾	2⅛	3⅛	1⅜	5.34
35	D40B35	5.860	B	¾	2⅛	3⅛	1⅜	6.80
36	D40B36	6.020	B	7/8	2⅛	3⅜	1⅜	7.20
40	D40B40	6.650	B	7/8	2⅛	3⅜	1⅜	9.40
42	D40B42	6.970	B	7/8	2⅛	3⅜	1⅜	10.20
45	D40B45	7.450	B	7/8	2⅛	3⅜	1⅜	11.36
48	D40B48	7.930	B	7/8	2⅛	3⅜	1⅜	12.66
52	D40B52	8.570	B	7/8	2⅛	3⅜	1⅜	14.46
54	D40B54	8.890	B	7/8	2⅛	3⅜	1⅜	15.48
60	D40B60	9.840	B	7/8	2⅛	3⅜	1⅜	18.60
68	D40B68	11.120	B	1 3/16	2⅜	4⅛	2⅛	24.96
72	D40B72	11.750	B	1 3/16	2⅜	4⅛	2⅛	27.88
76	D40B76	12.390	B	1 3/16	2⅜	4⅛	2⅛	30.18
84	D40B84	13.660	B	1 3/16	2⅜	4⅛	2⅛	36.24
95	D40B95	15.410	B	1 3/16	2⅜	4⅛	2⅛	38.84
96	D40B96	15.570	B	1 3/16	2⅜	4⅛	2⅛	39.50
102	D40B102	16.530	B	1 3/16	2⅜	4⅛	2⅛	42.72
112	D40B112	18.120	B	1 3/16	2⅜	4⅛	2⅛	55.54

* Has recessed groove in hub for chain clearance.

Maximum bores shown will accommodate standard keyseat and setscrew over keyseat. Slightly larger bores are possible with no keyseat, shallow keyseat, or setscrew at angle to keyseat.

NOTE: Double 40 stock sprockets with 25 teeth or less have hardened teeth. As indicated by H suffix.

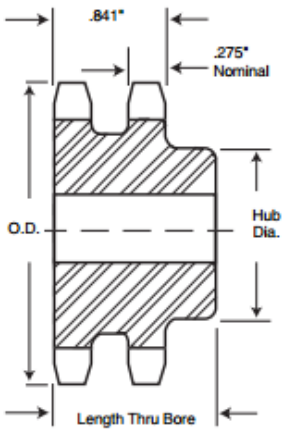

TYPE B

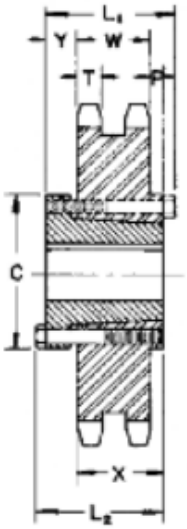

QD — TYPE C

Alteration Charges

See current discount sheet for alteration charges.

Double - Type QD

No. Teeth	Catalog Number	Bushing	Diameters Outside Diameter	Diameters Pitch Diameter	Type	Max. Bore	Dimensions L_1	L_2	C	Y	P	X	T	W	Weight Lbs. (Approx.) With Hub	Rim Only
36	D40SK36	SK	6.020	5.737	C	2⅝	2¼	2¼	3¼	⅜	5/32	1¼	0.275	0.841	6.68	4.68
40	D40SK40	SK	6.650	6.373	C	2⅝	2¼	2¼	3¼	⅜	5/32	1¼	0.275	0.841	8.02	6.02
42	D40SK42	SK	6.970	6.691	C	2⅝	2¼	2¼	3¼	⅜	5/32	1¼	0.275	0.841	8.82	6.82
45	D40SK45	SK	7.450	7.168	C	2⅝	2¼	2¼	3¼	⅜	5/32	1¼	0.275	0.841	9.98	7.98
48	D40SK48	SK	7.930	7.645	C	2⅝	2¼	2¼	3¼	⅜	5/32	1¼	0.275	0.841	11.22	9.22
52	D40SK52	SK	8.570	8.281	C	2⅝	2¼	2¼	3¼	⅜	5/32	1¼	0.275	0.841	13.04	11.04
54	D40SK54	SK	8.890	8.599	C	2⅝	2¼	2¼	3¼	⅜	5/32	1¼	0.275	0.841	14.06	12.06
60	D40SK60	SK	9.840	9.554	C	2⅝	2¼	2¼	3¼	⅜	5/32	1¼	0.275	0.841	16.98	14.98
68	D40SF68	SF	11.180	10.826	C	2 13/16	2¼	2¼	4⅜	⅜	5/32	1¼	2.750	0.841	22.72	19.72
72	D40SF72	SF	11.750	11.463	C	2 13/16	2¼	2¼	4⅜	⅜	5/32	1¼	2.750	0.841	24.20	22.20
76	D40SF76	SF	12.390	12.099	C	2 13/16	2¼	2¼	4⅜	⅜	5/32	1¼	2.750	0.841	28.20	25.20
84	D40SF84	SF	13.660	13.372	C	2 13/16	2¼	2¼	4⅜	⅜	5/32	1¼	2.750	0.841	33.64	30.64
95	D40SF95	SF	15.410	15.122	C	2 13/16	2¼	2¼	4⅜	⅜	5/32	1¼	2.750	0.841	40.22	37.22
102	D40SF102	SF	16.530	16.236	C	2 13/16	2¼	2¼	4⅜	⅜	5/32	1¼	2.750	0.841	42.70	39.70
112	D40SF112	SF	18.120	17.828	C	2 13/16	2¼	2¼	4⅜	⅜	5/32	1¼	2.750	0.841	52.60	49.60

Figure 12: Martin - Sprocket