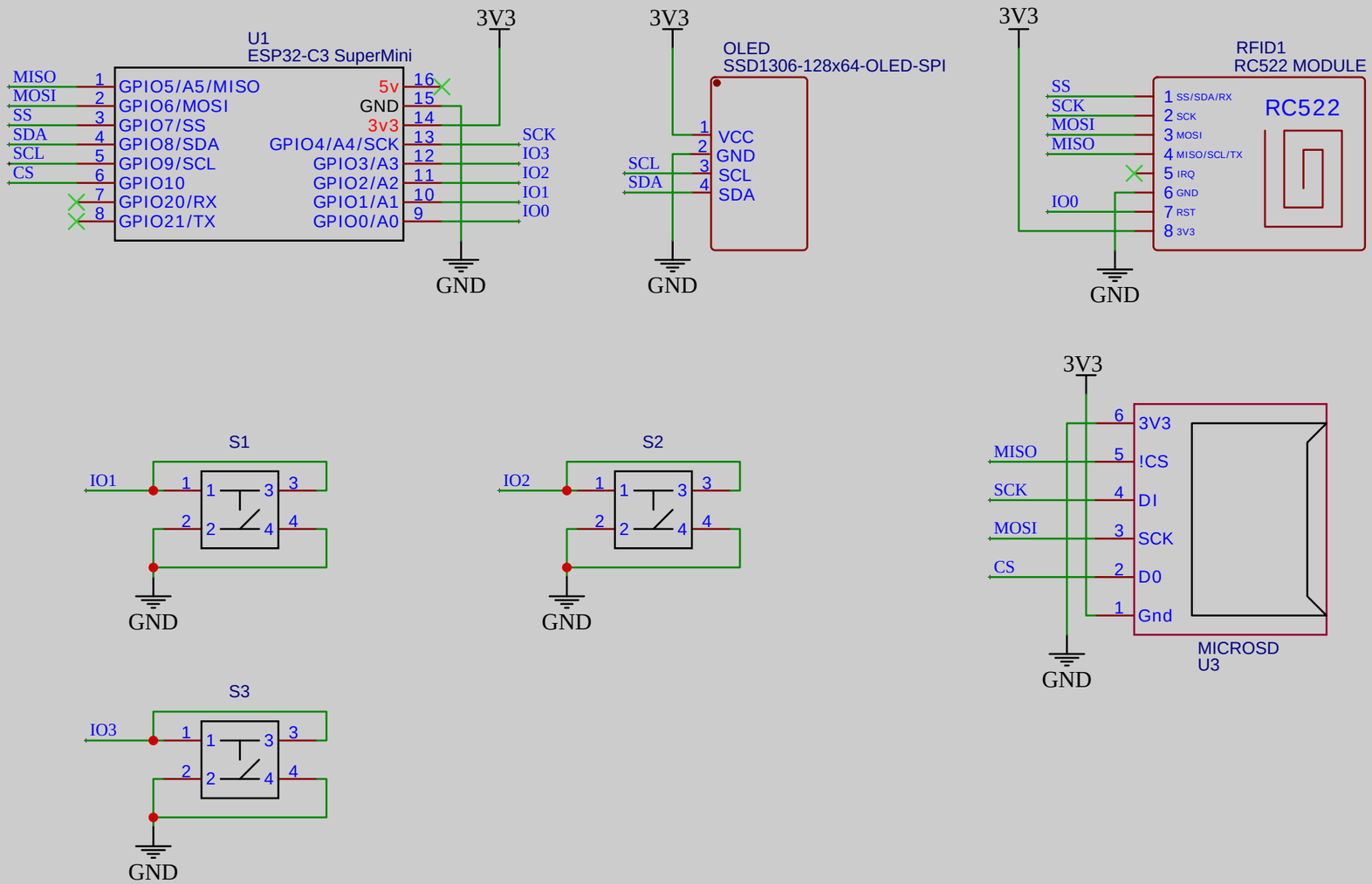

TITLE: RFID Device		REV: 1.0
EasyEDA	Company: DK	Sheet: 1/1
	Date: 2024-08-22 Drawn By: DK	