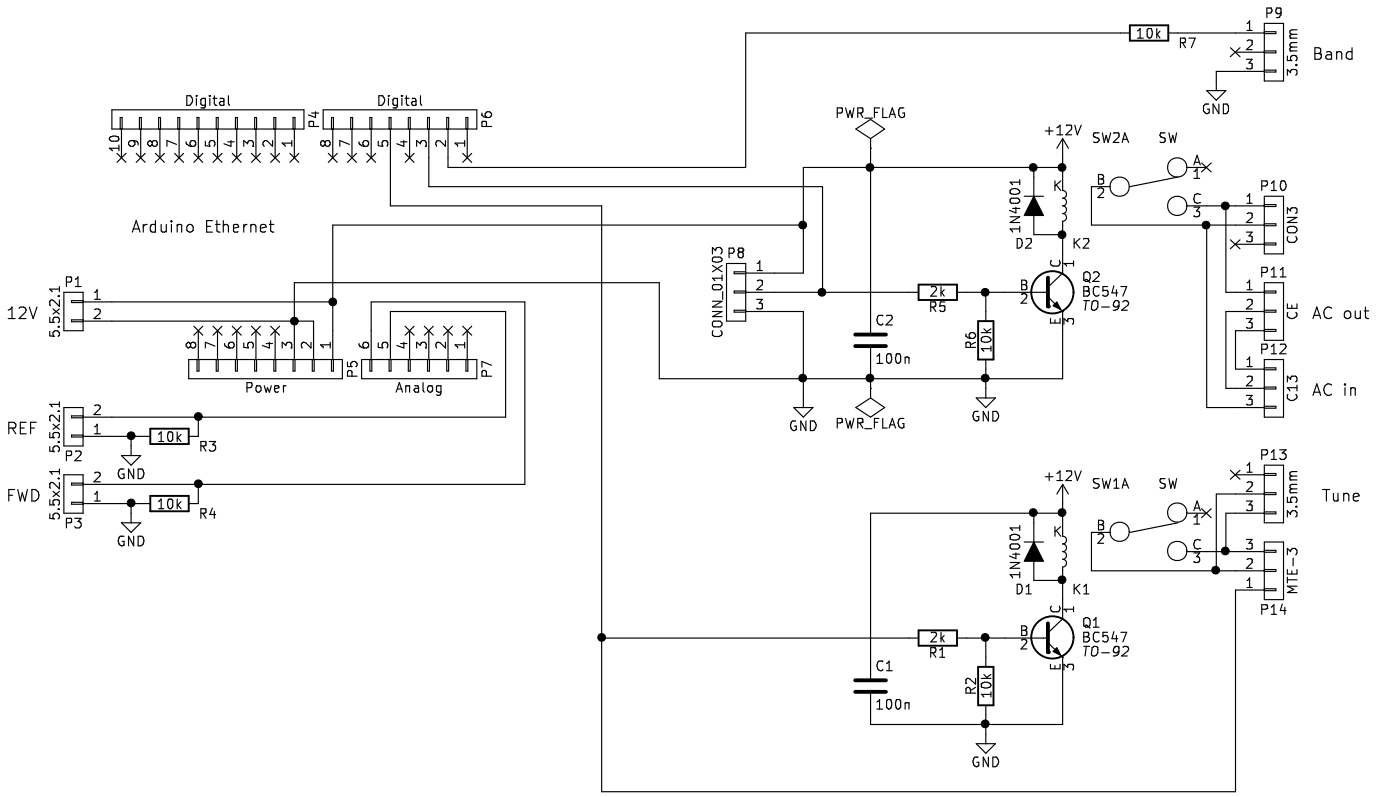

Sheet: /		
File: Arduino.sch		
Title: Arduino Box		
Size: A4	Date: DL9LJ – November 2016	**Rev:**
KiCad E.D.A. kicad 4.0.2+dfsg1-stable		Id: 1/1