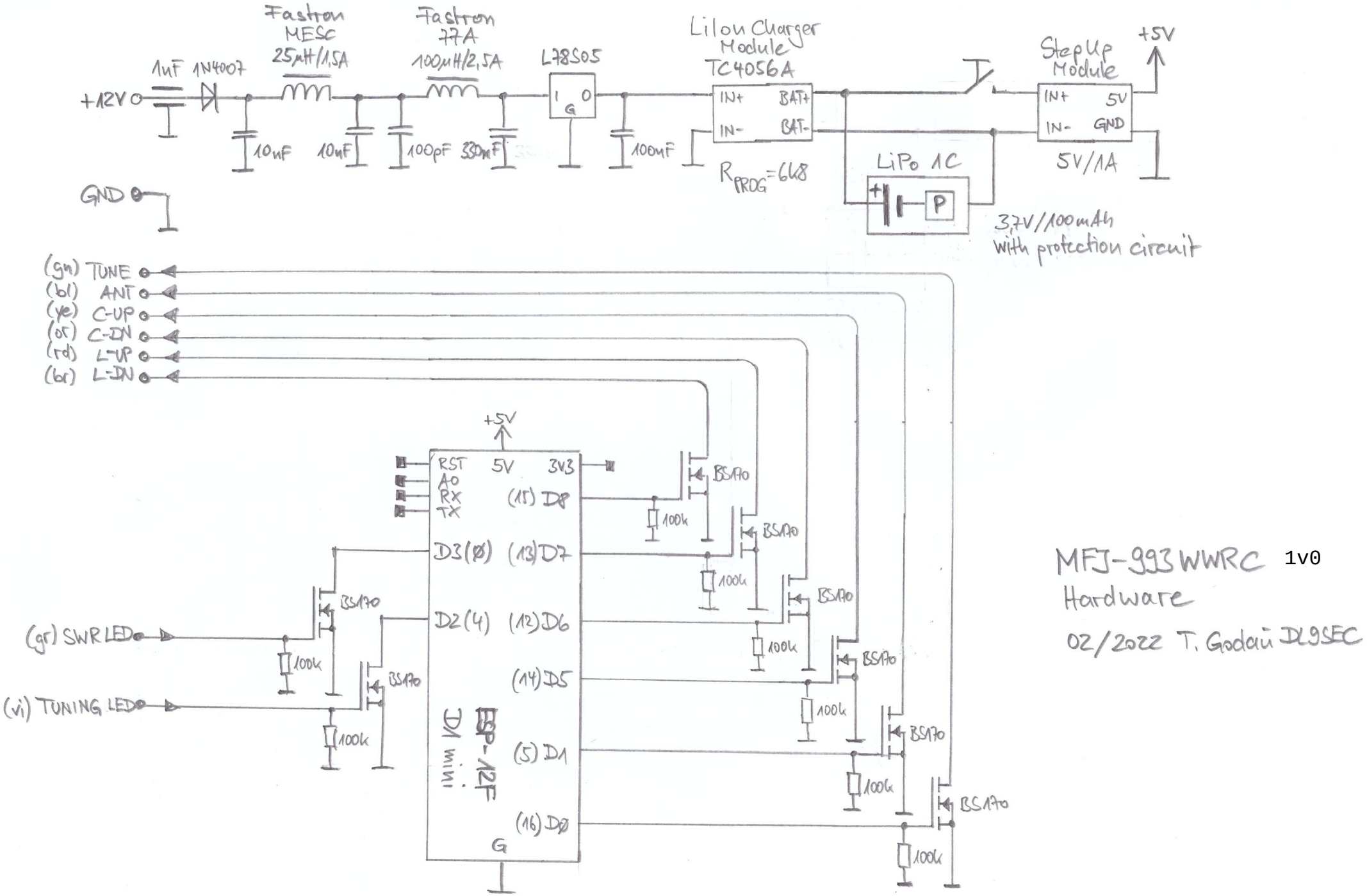
+12V
GND
1uF
1N4007
Fastron MESC 25µH/1,5A
Fastron 77A 100µH/2,5A
10uF
10uF
100pF
330uF
L78S05
I
O
G
100uF
Lilon Charger Module TC4056A
IN+
IN-
BAT+
BAT-
R PROG=6k8
LiPo 1C
P
3,7V/100mAh with protection circuit
Step Up Module
IN+
IN-
5V
GND
5V/1A
+5V
(gn) TUNE
(bl) ANT
(ye) C-UP
(or) C-DN
(rd) L-UP
(br) L-DN
(gr) SWR LED
(vi) TUNING LED
+5V
RST
A0
RX
TX
5V
3V3
(15) D8
D3(Ø)
(13) D7
D2(4)
(12) D6
(14) D5
(5) D1
(16) DØ
G
ESP-12F
D1 mini
BS170
100k
MFJ-993WWRC 1v0
Hardware
02/2022 T. Godau DL9SEC