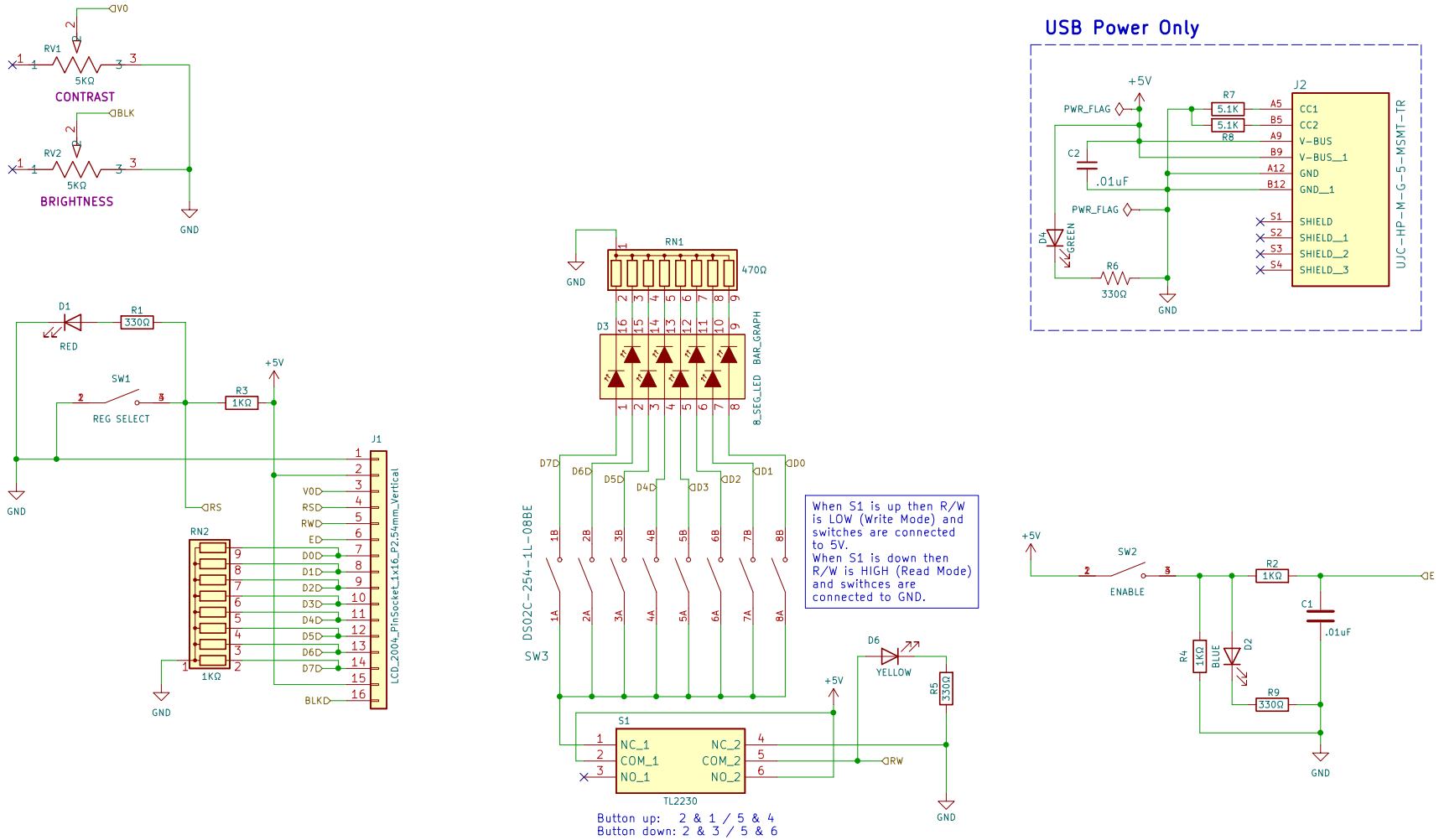

Mounting Holes

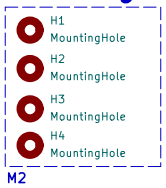

Sheet: /
File: hd44780_tutorial.kicad_sch

Title: HD44780 Tutorial PCB

Size: USLetter	Date: 2024-03-17	Rev: 1.1
KiCad E.D.A. kicad 7.0.10		Id: 1/1