Controller User Manual (English)
Scanned to PDF 2025.07 - SCUTTLE Robotics

GAME CONTROLLER

Find more SCUTTLE Tech Knowledge at
qr.net/scuttleproject (SCUTTLE Tech Guide)

ESM-9101 USER MANUAL

After-sale services

Read the following information to get better services.

Dear customers:

Thank you for purchasing EasySMX products. To make sure you can enjoy the after-sale services, please read this instruction carefully and keep the warranty card.

If you have any problems or suggestions, please contact us quickly and we will answer you as soon as possible.

Contact Information

USA: easysmx@easysmx.com
UK: jane@easysmx.com
Frankreich: fiona@easysmx.com
Deutschland: leslie@easysmx.com
Japan: support.jp@easysmx.com
Spanien: support.es@easysmx.com
Italien: support.it@easysmx.com

Contents

Introduction

English - 01~07

Deutsch - 08~14

Français - 15~21

Italiano - 22~28

Español - 29~35

日本語 - 36~42

Dear customer:

Thank you for purchasing EasySMX product. Please read this user manual carefully and keep it for further reference.

Package List

1x EasySMX ESM-9101 Game Controller

1x USB Receiver

1x USB Cable

1x User Manual

Product Overview

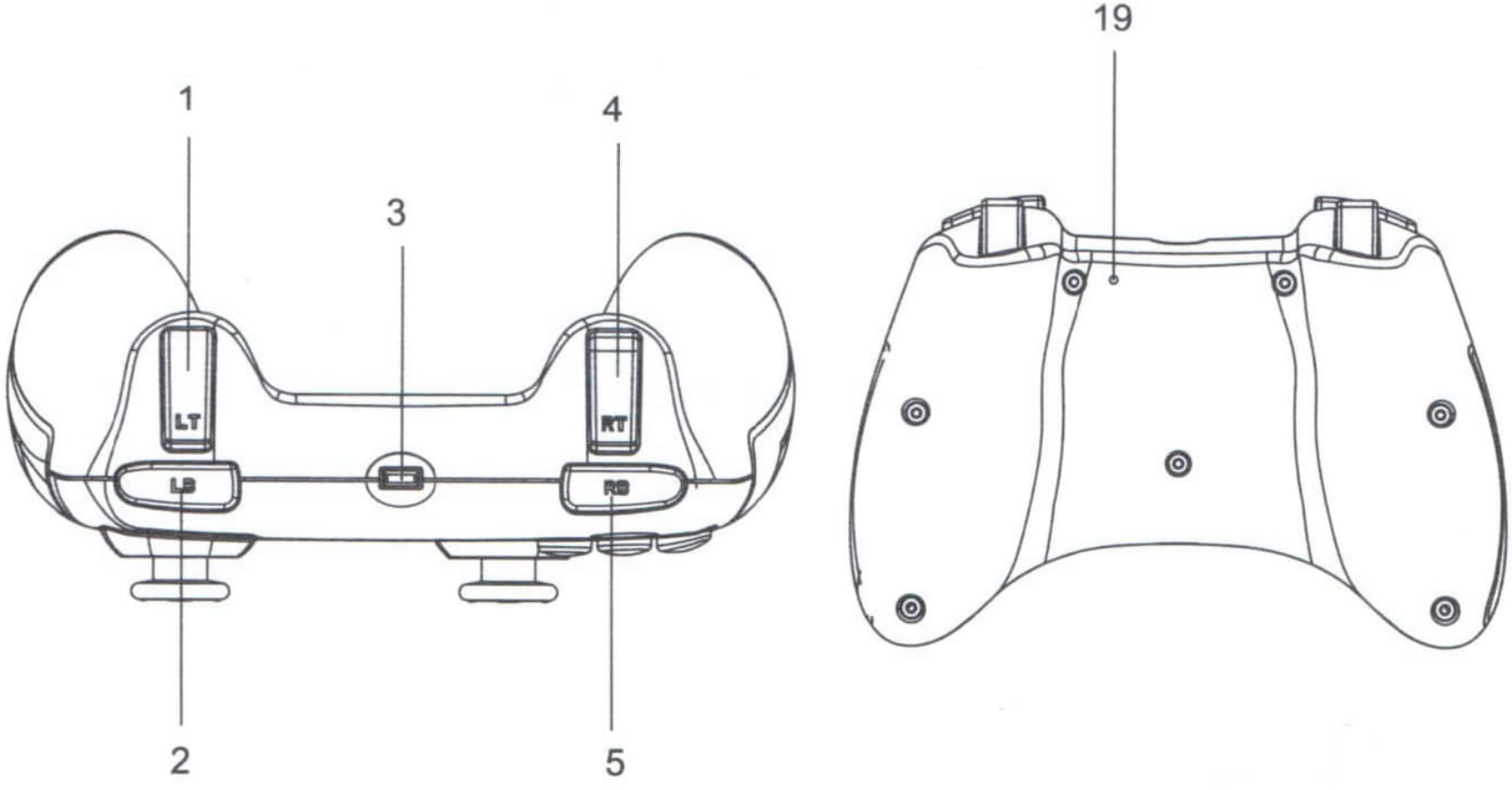

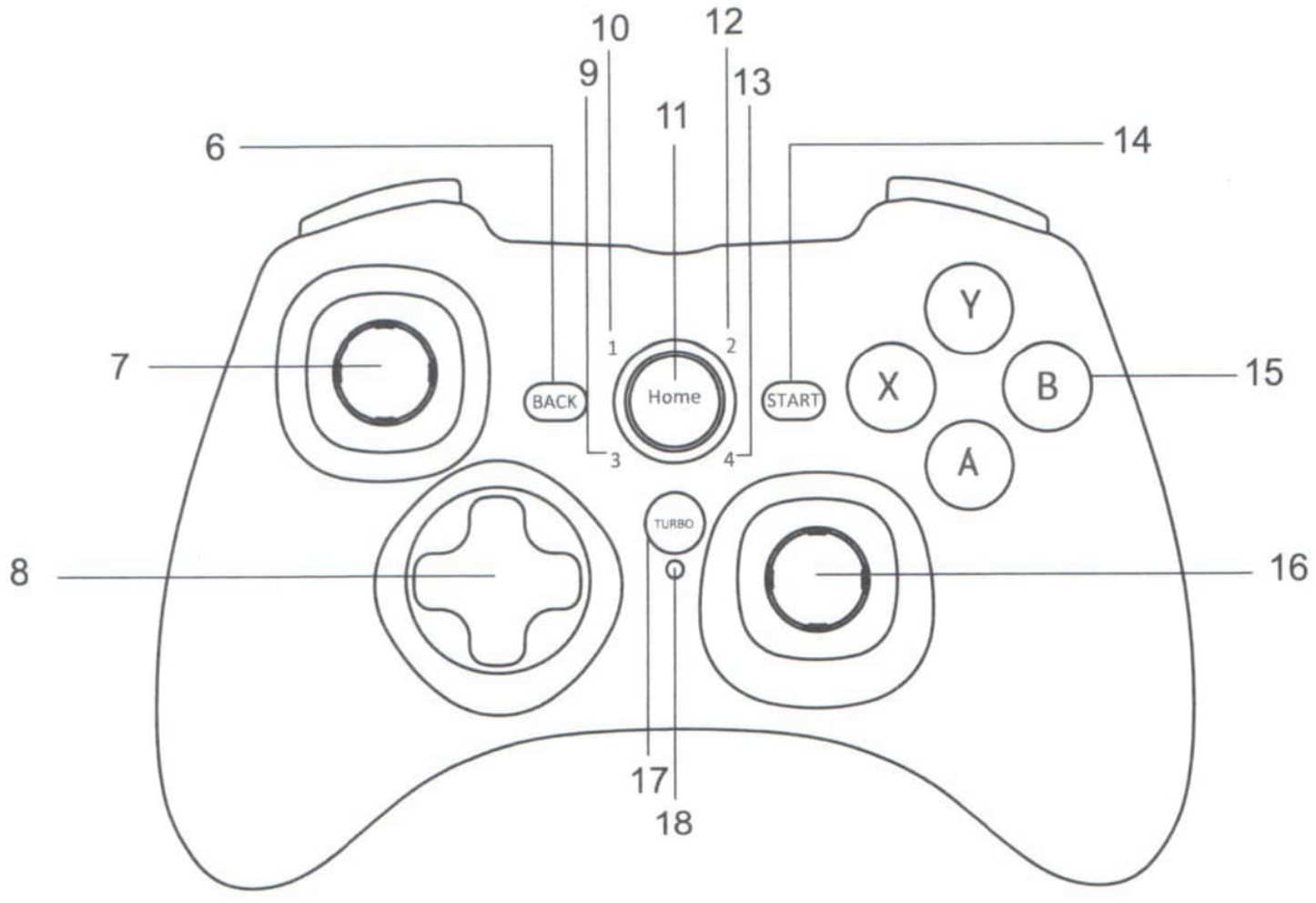

1. LT 2. LB 3. Charging Port 4. RT 5. RB
6. Back Button 7. Left Joystick 8. D-pad 9. LED 3
10. LED 1 11. Home Button 12. LED 2 13. LED 4
14. Start Button 15. X, Y, A, B 16. Right Joystick
17. TURBO Button 18. TURBO LED 19. Reset Hole

Specifications

Connection	2.4G Wireless Technology
Operating Range	10m（about 32.8ft）
Battery Capacity	600mAh
Charging Time	2 Hours
Operating Life Time	8 hours or more
Vibration	Dual Vibration
Operating Current	13mA
Compatibility	Windows XP/Windows 10/Windows 7/Windows 8/PS3

Power On/Off

1. Plug the receiver into your device and press the Home Button once to power on the game controller.

2. The game controller cannot be powered off manually. To power off, unplug the receiver first and the gamepad will power off if it stays unconnected for 30 seconds.

Note: The gamepad will shut down by itself in 5 minutes after it stays connected to some device without any operation.

Charging

1. To charge, use the included USB cable to plug the gamepad into your PC.
2. If the game controller is connected to some device during charging, the corresponding LED indicator will flash slowly. If the gamepad is fully charged, the LED indicator will stay on.
3. If the gamepad is not connected to any device, all 4 LED indicators will flash slowly during charging. They will turn off when the gamepad is fully charged.

Note: if the game controller is running low on batteries, the corresponding LED indicator will flash.

Connect to PS3

1. Plug the receiver into one free USB port on the PS3 console. Press the Home Button once to power on the gamepad and it will auto connect to the PS3 console.
2. PS3 console is available for 7 game controllers. Please see the table below for a detailed explanation for LED status.

Game Controller	LED Status
First One	LED1 stays on
Second One	LED2 stays on
Third One	LED3 stays on
Fourth One	LED4 stays on
Fifth One	LED1 and LED4 stay on
Sixth One	LED2 and LED4 stay on
Seventh One	LED3 and LED4 stay on

Connect to PC

1. Insert the USB receiver into your PC and press the Home Button once to power on the gamepad and it will auto connect to your PC. When LED1 and LED2 stay on , it means that the connection is finished and gamepad is Xinput mode by default.
2. Press and hold the Home Button for 5 seconds to switch to Dinput emulation mode. LED1 and LED3 will glow solid .
3. Press the HOME Button once to switch to Dinput digit mode, and LED1 and LED4 will stay on .
4. In this mode, press the Home Button for 5 seconds to switch to Android mode and LED3 and LED4 will stay on. Press it for 5 seconds again to return to Xinput mode.

Note: one computer can pair with more than one game controllers.

Connect to Android Smartphone/Tablet

1. Plug the Micro-B/Type C OTG adapter (Not Included) into the Nano receiver.
2. Plug the receiver into your phone or tablet.
3. Press the Home Button once to power on the game controller. LED3 and LED4 will keep on, indicating the connection is done.

Note:

1. Your Android phone or tablet must fully support OTG function that needs to be on first.
2. Android games does not support vibration for now. If the gamepad is trying to pair under non-Android mode, press the Home Button for 5 seconds to get it right.

TURBO Button Setting

1. Press and hold any key you want to set with TURBO function, then press TURBO Button. The TURBO LED will start flashing, indicating setting is done. After that, you are free to hold this button during gaming to achieve fast strike.
2. Hold down this button again and press TURBO Button simultaneously to disable TURBO function.

Notice

1. If the pairing fails, all LEDs will keep flashing fast. Press the Home Button to force it to pair.
2. Keep the gamepad away from water and do not use it in high-temperature conditions.
3. Children should not use this product without parents' supervision.

Button Test

After the computer is paired with your computer, go to "Device and Printer", locate game controller. Right click to go to "Game Controller Settings", then click "Property" as shown below:

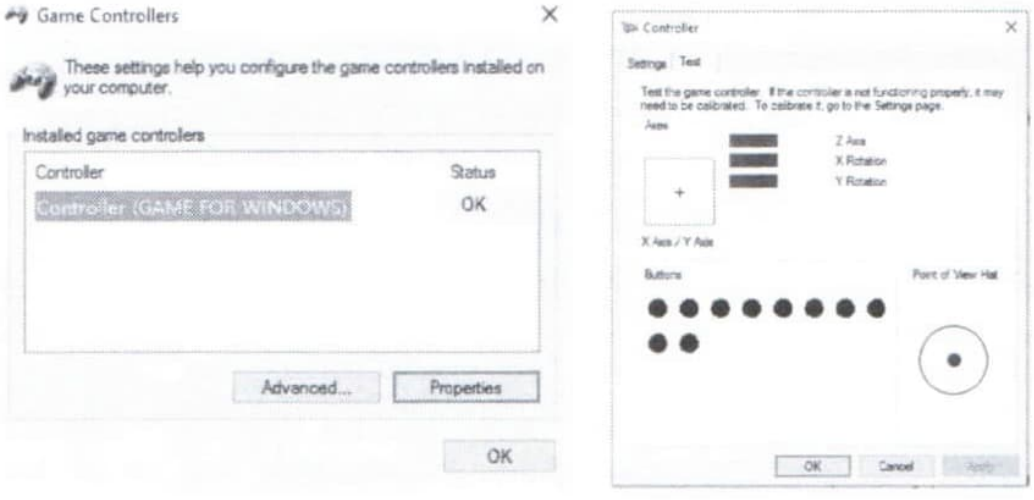

FAQ

1. The USB receiver failed to be recognized by my computer?

a. Make sure the USB port on your PC works fine.

b. Insufficient power might cause unstable voltage to your PC USB port. So try another free USB port.

c. A computer running Windows XP or a lower operating system needs to install X360 game controller driver first.

2. Why can't I use this game controller in the game?

a. The game you are playing doesn't support game controller.

b. You need to set the gamepad in the game settings first.

3. Why doesn't the game controller vibrate at all?

a. The game you are playing doesn't support vibration.

b. Vibration is not turned on in the game settings

4. Why does the game controller fail to connect?

a. The gamepad is running on low batteries, please recharge it.

b. The gamepad is out of the effective range.

Follow us for the best after-sales service and the latest news!

EasySMX Co., Limited
Email: easysmx@easysmx.com
Web: www.easysmx.com