DIN terminal Blocks - Summary

Updated *12/1/2025* **This File** *2025_dinTerminals.xlsx*
Author *David Malawey* **See Also:** *tbd*

Which DIN terminal blocks are equivalent?

This sheet is for identifying DIN terminals, with one common offering by each
Purpose: to help sourcing parts, finding CAD models, evaluating compatibility
The most famous among the selection is probably Dinkle.

Table1: Screw Terminals

Details for these parts are populated in the summary PDF

Equivalent to DK2.5N

mfg	model	Jumper	Wire Size	Note	Link
mcmaster	7641K923		22-12 AWG	1	mcmaster.com
dinkle	DK2.5N		22-12 AWG	2	
konnect-it	KN-T12BLU	KN-2J12	26-12 AWG	3	
schneider	NSYTRV22	3030161	26-12 AWG	4	mouser.com

No.	Note
1	exclusive thru McMaster
2	available from Amazon.com
3	exclusive brand of AutomationDirect - much data available
4	(new in 2025) distributed through Mouser.com

Table2: My CAD Models

differentiating CAD models:

NAME	INFO
terminal_1	most detailed model, true solidworks feature tree, but does not match jumper style of Dinkle
terminal_2	lacks detail, uses imported geometry. Has configurations for each color
terminal_3	lacks detail, imported geometry - matches Konnect-it model KN-2J12

DK2.5N

DIN Rail Terminal Blocks > Screw Connection

Date:2023-03-07Version:1.2

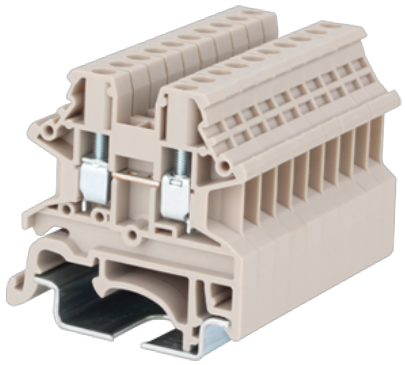

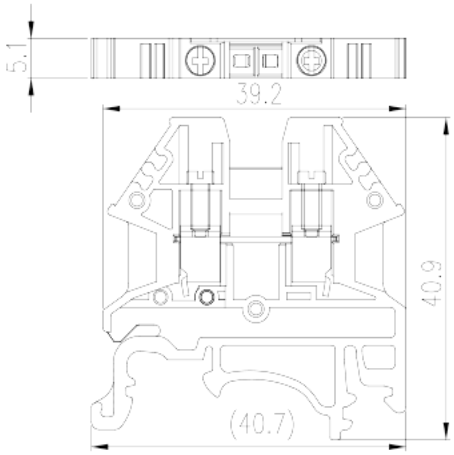

The web catalog is for reference only. Dinkle remains the right of product modification and engineering change of the design. The final product is made according to engineering drawing.

Product Description

M2.5, 600V, 20A, Beige (default)

General information

Short description	DIN rail terminal blocks, Feed through terminal blocks
Category	Feed through terminal blocks
Color	Beige (default)
Connection method	Screw connection
Type of locking	Rail mounting
Length (mm)	40.7
Width (mm)	5.1
Height (mm)	39.6
Number of positions	□1P
Level	Single level
Connection points	2

Material information

Insulation material	PA
Insulation material group	I
Flame retardant rating , compliant with UL94	V0

© DINKLE ENTERPRISE CO ,LTD. ALL RIGHT RESERVED

Wire Range (Group B)(AWG)	22~12
Rated voltage (Group B)(V)	600
Rated current (Group B)(A)	20
Wire Range (Group C)(AWG)	22~12
Rated voltage (Group C)(V)	600
Rated current (Group C)(A)	20
Wire Ranget (Group D)(AWG)	22~12
Rated voltage (Group D)(V)	600
Rated current (Group D)(A)	5

VDE Approval

Wire Range (mm²)	0.34~2.5
Rated voltage (V)	1000
Rated current (A)	24

Explosion - proof Approvals

Wire Range (mm²)	0.34~2.5
Rated voltage (V)	1000
Rated current (A)	24

Drawings

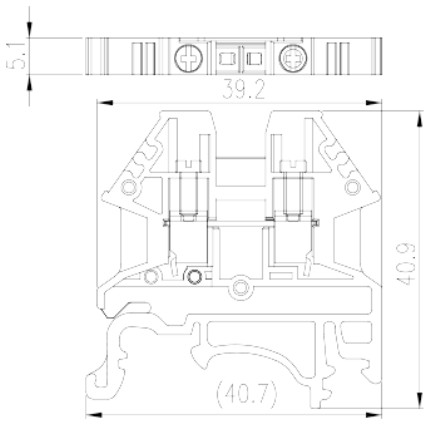

Approvals

© DINKLE ENTERPRISE CO ,LTD. ALL RIGHT RESERVED

KN-T12BLU-100 Cut Sheet

AUTOMATIONDIRECT.com
www.automationdirect.com

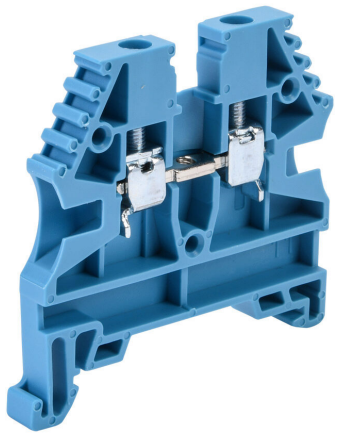

Konnect-It screw single-level feedthrough terminal block, accepts wire size 26-12 AWG, blue, 20A, 35mm DIN rail mount, 100kA SCCR. Package of 100. For use with jumpers KN-2J12, KN-3J12, KN-4J12 and KN-10J12.

For complete product information, please see this item on our store at the following link:

https://www.automationdirect.com/pn/KN-T12BLU-100

Technical Specifications

Brand	Konnect-It
Item	Terminal block
Connector Type	Screw
Terminal Block Type	Single-level feedthrough
Wire Size	26-12 AWG
Color	Blue
Amperage Rating	20A
Voltage Rating	600V rated (UL)
Mounting	35mm DIN rail
SCCR Rating	100kA SCCR
Quantity per Pack	100
For Use With	Jumpers KN-2J12, KN-3J12, KN-4J12 and KN-10J12

Agency Approvals

UL Listed File #	None
UL Recognized File #	E179129
UL Hazardous File #	None
CE	View CE declarations
CSA File #	None
RoHS Status	Yes (See CE Doc)
EU REACH	View EU REACH document

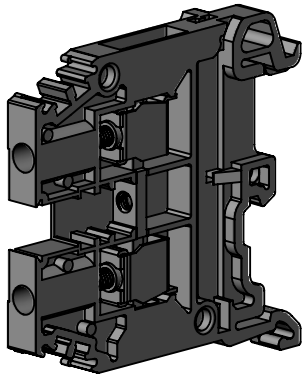

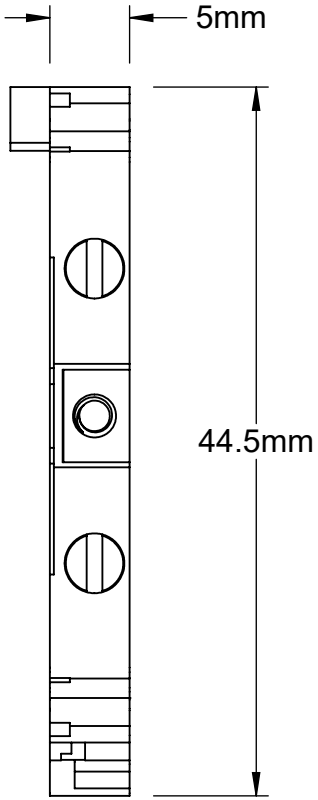

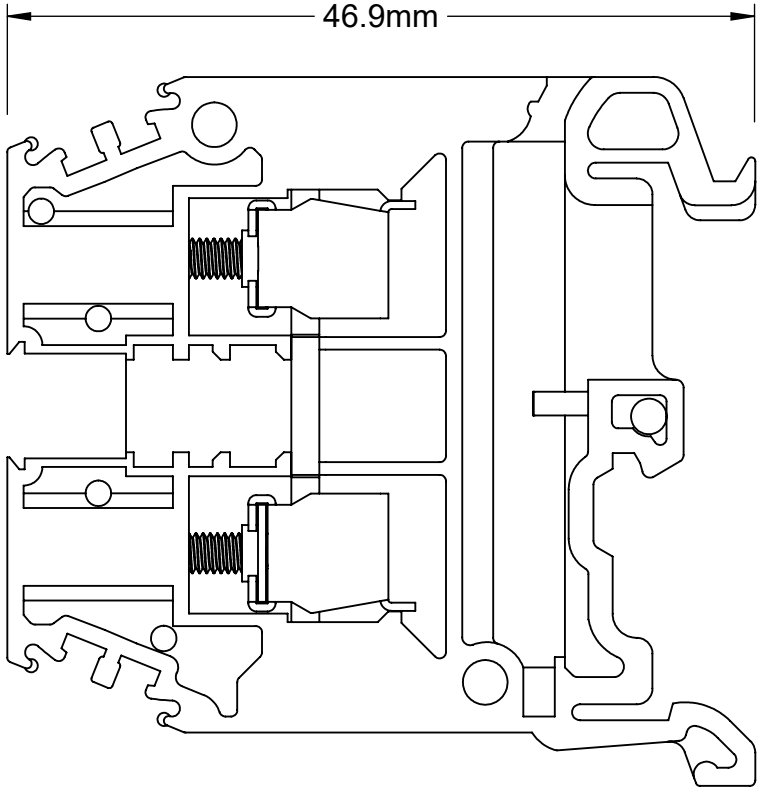

Number of Circuits: 1
For Wire Gauge: 22-12
For DIN Rail Size: DIN 1 (32mm), DIN 3 (35mm)

McMASTER-CARR® CAD	PART NUMBER	7641K923
http://www.mcmaster.com © 2024 McMaster-Carr Supply Company Information in this drawing is provided for reference only.	Modular DIN-Rail Mount Terminal Block	

KONNECT-IT TERMINAL BLOCKS

Single-Level Terminal Blocks

- Screw connection terminal
- UL E179129 (For copper wire only. One conductor in terminal only.)
- VDE (IEC 60947-7-1)
- CE (EN 60947-7-1)

KN-T8 **Dimensions: mm [in]**

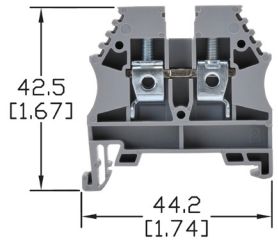

See our website: www.AutomationDirect.com for complete engineering drawings

[1]UL Usage Group: B, C for 300V or D for 600V

Ordering Information

Colors	Part Number	Qty	Price	Part Number	Qty	Price	Part Number	Qty	Price
Gray	KN-T12GRY-100	100	$36.50	KN-T10GRY-80	80	$32.00	KN-T8GRY-60	60	$50.00
	KN-T12GRY-25	25	$9.75	KN-T10GRY-20	20	$8.50	KN-T8GRY-20	20	$17.50
Blue	KN-T12BLU-100	100	$36.50	KN-T10BLU-80	80	$32.00	KN-T8BLU-60	60	$50.00
	KN-T12BLU-25	25	$9.75	KN-T10BLU-20	20	$8.50	KN-T8BLU-20	20	$17.50
Brown	KN-T12BRN-100	100	$36.50	KN-T10BRN-80	80	$32.00	KN-T8BRN-60	60	$50.00
	KN-T12BRN-25	25	$9.75	KN-T10BRN-20	20	$8.50	KN-T8BRN-20	20	$17.50
Black	KN-T12BLK-100	100	$36.50	KN-T10BLK-80	80	$32.00	KN-T8BLK-60	60	$50.00
	KN-T12BLK-25	25	$9.75	KN-T10BLK-20	20	$8.50	KN-T8BLK-20	20	$17.50
Green	KN-T12GRN-100	100	$36.50	KN-T10GRN-80	80	$32.00	KN-T8GRN-60	60	$50.00
	KN-T12GRN-25	25	$9.75	KN-T10GRN-20	20	$8.50	KN-T8GRN-20	20	$17.50
Orange	KN-T12ORG-100	100	$36.50	KN-T10ORG-80	80	$32.00	KN-T8ORG-60	60	$50.00
	KN-T12ORG-25	25	$9.75	KN-T10ORG-20	20	$8.50	KN-T8ORG-20	20	$17.50
Red	KN-T12RED-100	100	$36.50	KN-T10RED-80	80	$32.00	KN-T8RED-60	60	$50.00
	KN-T12RED-25	25	$9.75	KN-T10RED-20	20	$8.50	KN-T8RED-20	20	$17.50
Yellow	KN-T12YEL-100	100	$36.50	KN-T10YEL-80	80	$32.00	KN-T8YEL-60	60	$50.00
	KN-T12YEL-25	25	$9.75	KN-T10YEL-20	20	$8.50	KN-T8YEL-20	20	$17.50
White	KN-T12WHT-100	100	$36.50	KN-T10WHT-80	80	$32.00	KN-T8WHT-60	60	$50.00
	KN-T12WHT-25	25	$9.75	KN-T10WHT-20	20	$8.50	KN-T8WHT-20	20	$17.50

Technical Specifications

Model	KN-T12			KN-T10			KN-T8		
Width	5 mm [0.20 in]			6 mm [0.24 in]			8 mm [0.31 in]		
Stripping Length	10 mm [0.39 in]			10 mm [0.39 in]			12 mm [0.47 in]		
Tightening Torque	0.4 N·m [3.5 lb·in]			0.5 N·m [4.4 lb·in]			0.8 N·m [7.1 lb·in]		
Density	200/m [60 pcs/ft]			166/m [50 pcs/ft]			125/m [38 pcs/ft]		
UL/CSA Approval	600 V	20A	26–12 AWG	[1]300 V	30 A	26–10 AWG	[1]300 V	50 A	26–8 AWG
VDE Approval	750 V	24 A	2.5 mm²	750 V	32 A	4 mm²	630 V	41 A	6 mm²
CE Conformity	750 V	24 A	2.5 mm²	750 V	32 A	4 mm²	630 V	41 A	6 mm²
SCCR Rating	100 kA			100 kA			100 kA		
Operating Temperature	Ambient -67 °F to +185 °F [-55 °C to +85 °C], Relative humidity: 50% max at 104 °F [40 °C] and 90% max at 68 °F [20 °C]								
Material	Current Bar: Copper Alloy / Housing: Polyamide 66 / Screw: Zinc Plated Steel								
Mounting	35 mm DIN rail								

Accessories

End Covers (International colors)	Gray	KN-ECT6GRY	100/pkg	$31.00	KN-ECT6GRY	100/pkg	$31.00	KN-ECT6GRY	100/pkg	$31.00
		KN-ECT6GRY-25	25/pkg	$6.75	KN-ECT6GRY-25	25/pkg	$6.75	KN-ECT6GRY-25	25/pkg	$6.75
	Blue	KN-ECT6BLU	10/pkg	$3.75	KN-ECT6BLU	10/pkg	$3.75	KN-ECT6BLU	10/pkg	$3.75
	Brown	KN-ECT6BRN		$3.75	KN-ECT6BRN		$3.75	KN-ECT6BRN		$3.75
	Black	KN-ECT6BLK		$3.75	KN-ECT6BLK		$3.75	KN-ECT6BLK		$3.75
	Green	KN-ECT6GRN		$3.75	KN-ECT6GRN		$3.75	KN-ECT6GRN		$3.75
	Orange	KN-ECT6ORG		$3.75	KN-ECT6ORG		$3.75	KN-ECT6ORG		$3.75
	Red	KN-ECT6RED		$3.75	KN-ECT6RED		$3.75	KN-ECT6RED		$3.75
	Yellow	KN-ECT6YEL		$3.75	KN-ECT6YEL		$3.75	KN-ECT6YEL		$3.75
	White	KN-ECT6WHT		$3.75	KN-ECT6WHT		$3.75	KN-ECT6WHT		$3.75
Separators (International colors)	Gray	KN-ST1GRY	25/pkg	$13.00	KN-ST1GRY	25/pkg	$13.00	KN-ST1GRY	25/pkg	$13.00
	Blue	KN-ST1BLU	10/pkg	$5.00	KN-ST1BLU	10/pkg	$5.00	KN-ST1BLU	10/pkg	$5.00
	Brown	KN-ST1BRN		$5.00	KN-ST1BRN		$5.00	KN-ST1BRN		$5.00
	Black	KN-ST1BLK		$5.00	KN-ST1BLK		$5.00	KN-ST1BLK		$5.00
	Green	KN-ST1GRN		$5.00	KN-ST1GRN		$5.00	KN-ST1GRN		$5.00
	Orange	KN-ST1ORG		$5.00	KN-ST1ORG		$5.00	KN-ST1ORG		$5.00
	Red	KN-ST1RED		$5.00	KN-ST1RED		$5.00	KN-ST1RED		$5.00
	Yellow	KN-ST1YEL		$5.00	KN-ST1YEL		$5.00	KN-ST1YEL		$5.00
	White	KN-ST1WHT		$5.00	KN-ST1WHT		$5.00	KN-ST1WHT		$5.00
Jumpers	2-pole	KN-2J12	25/pkg	$13.50	KN-2J10	25/pkg	$20.50	KN-2J8	25/pkg	$21.50
	3-pole	KN-3J12	20/pkg	$17.50	KN-3J10	20/pkg	$24.50	KN-3J8	20/pkg	$25.50
	4-pole	KN-4J12	15/pkg	$21.50	KN-4J10	15/pkg	$24.50	KN-4J8	15/pkg	$25.50
	10-pole	KN-10J12	5/pkg	$13.50	KN-10J10	5/pkg	$17.50	KN-10J8	5/pkg	$20.50
Comb-type jumper / 2-pole		KN-2JCC12	25/pkg	$18.50	KN-2JCC10	25/pkg	$36.00	KN-2JCC8	25/pkg	$38.50
Top Cover / Blank		KN-TC-1	25/pkg	$10.00	KN-TC-1	25/pkg	$10.00	KN-TC-1	25/pkg	$10.00
Top Cover / Symbol		KN-TC-1S	25/pkg	$15.00	KN-TC-1S	25/pkg	$15.00	KN-TC-1S	25/pkg	$15.00
Marking Tags		KN-L5 Series			KN-L5 Series			KN-L5 / KN-L6P5 Series		

KONNECT-IT TERMINAL BLOCKS

Single-Level Terminal Blocks

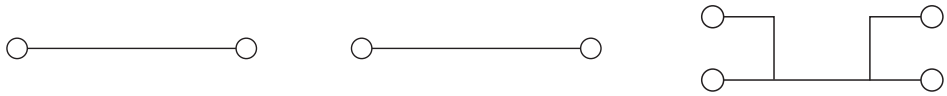

- Screw connection terminal
- UL E179129 (For copper wire only. One conductor in terminal only.)
- CE (EN 60947-7-1)

Dimensions: mm [in]

KN-T1/0

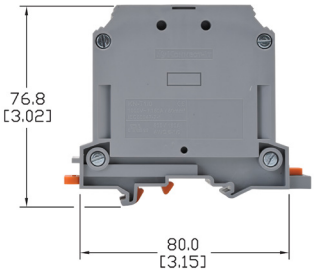

KN-T2/0

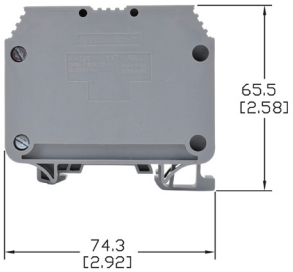

KN-T12SP4

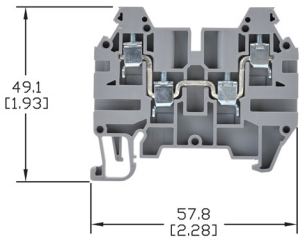

See our website: www.AutomationDirect.com for complete engineering drawings

Ordering Information

Colors	Part Number	Qty	Price	Part Number	Qty	Price	Part Number	Qty	Price
Gray	KN-T1/0GRY	25	$112.00	KN-T2/0GRY	10	$70.00	KN-T12SP4	100	$206.00
	KN-T1/0GRY-10	10	$43.50	—	—	—	KN-T12SP4-25	25	$67.00
Blue	KN-T1/0BLU	25	$112.00	KN-T2/0BLU	10	$101.00	—	—	—
	KN-T1/0BLU-10	10	$43.50	—	—	—	—	—	—

Technical Specifications

Model	KN-T1/0			KN-T2/0			KN-T12SP4		
Width	20 mm [0.79 in]			22 mm [0.87 in]			5 mm [0.20 in]		
Stripping Length	20 mm [0.79 in]			20 mm [0.79 in]			10 mm [0.39 in]		
Tightening Torque	6.0 N·m [53.1 lb·in]			6.0 N·m [53.1 lb·in]			0.5 N·m [4.4 lb·in]		
Density	50/m [15 pcs/ft]			45/m [13 pcs/ft]			200/m [60 pcs/ft]		
UL/CSA Approval	600 V	150A	6-1/0 AWG	600 V	175A	6-2/0 AWG	600 V	20A	26–12 AWG
CE Conformity	1000 V	150 A	50mm²	750 V	192A	70mm²	750 V	24 A	2.5 mm²
SCCR Rating	100 kA			100 kA			100 kA per Table SB4.1, 2009, UL 508A.		
Operating Temperature	Ambient -67 °F to +185 °F [-55 °C to +85 °C], Relative humidity: 50% max at 104 °F [40 °C] and 90% max at 68 °F [20 °C]								
Material	Current Bar: Copper Alloy / Housing: Polyamide 66 / Screws: Zinc Plated Steel								
Mounting	35 mm DIN rail								

Accessories

End Covers	Gray	—	—	—	—	—	—	KN-ECT12SP4	25/pkg	$13.50
Jumpers	2-pole	KN-2J1/0	5/pkg	$12.50	—	—	—	KN-2JM12	25/pkg	$12.50
	3-pole	KN-3J1/0	5/pkg	$21.50	—	—	—	KN-3JM12	20/pkg	$13.50
	4-pole	KN-4J1/0	5/pkg	$28.00	—	—	—	KN-4JM12	15/pkg	$13.50
	10-pole	—	—	—	—	—	—	KN-10JM12	5/pkg	$16.50
Marking Tags		No tags available			KN-L5 Series KN-L6P5 Series			KN-L5 Series		

KONNECT-IT® Accessories

Multi-Pole Jumper Bars

Multi-pole jumper bars provide terminal block connection flexibility. Screw-down connection jumpers feature all-metal construction and can be installed quickly just by tightening the screws. Screwless comb-style jumpers are also available. See next page for the larger J1/0 jumper installation instructions.

KN-10J12

KN-2JM12

KN-2JCC8

Multi-Pole Jumper Bars Ordering Information

Type	Part Number	Price	Qty	Number of Poles	Rating		Tightening Torque	Dimensions - mm [in] Height	Length	Width	Fig.	Works With
Screw-down connection	KN-2J12	$13.50	25	2	750V	24A	0.4– 0.6 Nm [3.5–5.3 lb-in]	15.8 [0.62]	10.1 [0.40]	4.4 [0.17]	1	KN-T12xx KN-D12xx KN-D12X KN-D12DR1 KN-D12LEDxx
	KN-3J12	$17.50	20	3					15.3 [0.60]			
	KN-4J12	$21.50	15	4					20.4 [0.80]			
	KN-10J12	$13.50	5	10					51.1 [2.01]			
	KN-2J10	$20.50	25	2	750V	32A	0.6– 0.8 Nm [5.3–7.1 Lb-In]	15.5 [0.61]	10.8 [0.43]	6.0 [0.24]	1	KN-T10xx KN-D10xx KN-D10X KN-D10DR1 KN-D10LEDxx
	KN-3J10	$24.50	20	3					17.0 [0.67]			
	KN-4J10	$24.50	15	4					23.0 [0.91]			
	KN-10J10	$17.50	5	10					59.0 [2.32]			
	KN-2J8	$21.50	25	2	630V	41A	0.6– 0.8 Nm [5.3–7.1 lb-In]	15.5 [0.61]	14.3 [0.56]	6.0 [0.24]	1	KN-T8xx
	KN-3J8	$25.50	20	3					22.3 [0.88]			
	KN-4J8	$25.50	15	4					30.3 [1.19]			
	KN-10J8	$20.50	5	10					78.3 [3.08]			
	KN-2J6	$26.50	25	2	630V	57A	0.6– 0.8 Nm [5.3–7.1 lb-In]	15.5 [0.61]	18.0 [0.71]	6.0 [0.24]	1	KN-T6xx
	KN-3J6	$28.00	20	3					28.0 [1.10]			
	KN-4J6	$28.00	15	4					38.0 [1.50]			
	KN-10J6	$21.50	5	10					98.0 [3.86]			
	KN-2J4	$41.50	25	2	750V	76A	0.6– 0.8 Nm [5.3–7.1 lb-In]	23.0 [0.91]	21.0 [0.83]	6.0 [0.24]	1	KN-T4xx
	KN-3J4	$44.00	20	3					33.0 [1.30]			
	KN-4J4	$44.00	15	4					45.0 [1.77]			
	KN-10J4	$34.00	5	10					117.0 [4.61]			
	KN-2J2	$43.00	25	2	750V	125A	1.2–1.4 Nm [10.6–12.4 lb-In]	21.0 [0.83]	29.0 [1.14]	8.0 [0.31]	1	KN-T2xx
	KN-3J2	$46.00	20	3					45.0 [1.77]			
	KN-4J2	$46.00	15	4					61.0 [2.40]			
	KN-10J2	$34.00	5	10					157.0 [6.18]			
	KN-2J1/0	$12.50	5	2	1000V	150A	2.5–3.5 Nm [22.1–31.0 lb-In]	22.3 [0.88]	36.0 [1.42]	12.0 [0.47]	2	KN-T1/0xx
	KN-3J1/0	$21.50	5	3					56.0 [2.20]			
	KN-4J1/0	$28.00	5	4					76.0 [2.99]			
	KN-2JTL12	$21.50	25	2	440V	24A	0.4–0.6 Nm [3.5–5.3 lb-In]	15.5 [0.61]	11.0 [0.43]	4.4 [0.17]	1	KN-DG12 KN-TG12 KN-TL14 KN-TL14S KN-TL14SLN KN-TL14SLP
	KN-3JTL12	$26.50	20	3					17.0 [0.67]			
	KN-4JTL12	$25.50	15	4					23.0 [0.91]			
	KN-10JTL12	$21.50	5	10					59.0 [2.32]			
Push-in Connection	KN-2JM10	$12.50	25	2	750V	32A	–	23.2 [0.91]	9.5 [0.37]	2.7 [0.11]	3	KN-M10xx KN-KBD10
	KN-3JM10	$16.50	20	3					15.5 [0.61]			
	KN-4JM10	$18.50	15	4					21.5 [0.85]			
	KN-10JM10	$17.50	5	10					57.5 [2.26]			
	KN-2JM12	$12.50	25	2	750V	24A	–	21.7 [0.85]	8.0 [0.31]	2.3 [0.09]	3	KN-M12xx KN-T12SP4
	KN-3JM12	$13.50	20	3					13.0 [0.51]			
	KN-4JM12	$13.50	15	4					18.0 [0.71]			
	KN-10JM12	$16.50	5	10					48.0 [1.89]			
Screwless Comb-style	KN-2JCC12	$18.50	25	2	750V	24A	–	23.7 [0.93]	8.0 [0.31]	2.8 [0.11]	4	KN-T12xx
	KN-2JCC10	$36.00	25		750V	32A	–	24.7 [0.97]	9.5 [0.37]			KN-T10xx
	KN-2JCC8	$38.50	25		630V	41A	–	25.6 [1.01]	13.5 [0.53]			KN-T8xx
	KN-2JCC6	$43.00	25		630V	57A	–	26.7 [1.05]	16.0 [0.63]	3.9 [0.15]		KN-T6xx

Figure 1

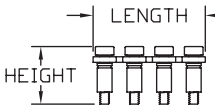

Figure 2

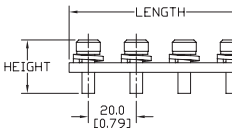

Figure 3

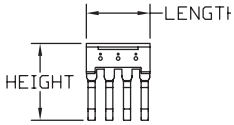

Figure 4

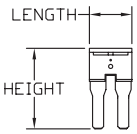

Please visit our website www.AutomationDirect.com for complete engineering drawings.

Screwless Comb-Style jumpers are designed to be connected under the conductor clamp.

KONNECT-IT® Accessories

End Brackets

End brackets prevent terminal blocks and other DIN rail mount components and devices from moving laterally on the rail. They are constructed from polyamide 66 and available in configurations for 35 mm and 15 mm DIN rails.

Dimensions mm [in]

KN-EB3

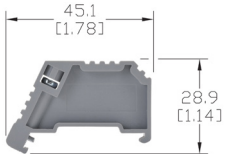

KN-EB4

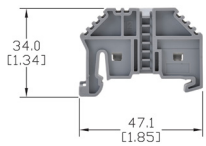

KN-EB5

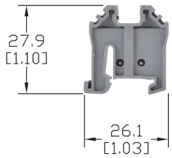

KN-EB7

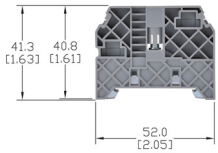

End Brackets Ordering Information												
Gray End Brackets	***KN-EB3***	100/pkg	$57.00	***KN-EB4***	100/pkg	$59.00	***KN-EB5***	100/pkg	$86.00	***KN-EB7***	50/pkg	$59.00
	KN-EB3-10	10/pkg	$7.50	***KN-EB4-10***	10/pkg	$5.25	***KN-EB5-10***	10/pkg	$9.75	***KN-EB7-10***	10/pkg	$11.50

Technical Specifications				
Description	Screw-type end bracket	Screwless end bracket	Screwless end bracket	Screw-type end bracket
Bracket Width	8 mm [0.31 in]	8 mm [0.31 in]	8 mm [0.31 in]	10 mm [0.39 in]
Mounting	35 mm DIN rail	35 mm DIN rail	15 mm DIN rail	35 mm DIN rail
Material	Housing: Polyamide 66 / Clamping Connector: Zinc Plated Steel			

End Bracket Accessories												
Label Holder	—	—	—	***KN-MA-1***	25/pkg	$25.00	—	—	—	***KN-MA-2***	50/pkg	$63.00
	—	—	—	***KN-MA-1-10***	10/pkg	$11.00	—	—	—	***KN-MA-2-10***	10/pkg	$15.00
Marking Tags	KN-L5 Series or KN-L6P5 Series											

End Covers

End covers are used to cover the open side of sectional DIN rail mount terminal blocks. They should be used at the end of an assembly of identical terminal blocks or whenever there is a change in the physical size of the terminal block.
Material: Polyamide 66

End Covers Ordering Information											
Part Number	***Color***	***Dimensions H x L x W mm [in]***	***Works With***	***Qty***	***Price***	***Part Number***	***Color***	***Dimensions H x L x W mm [in]***	***Works With***	***Qty***	***Price***
KN-ECT6GRY	Gray	34.0 x 42. 7x 1.3 [1.34 x 1.68x 0.05]	KN-T12 KN-T10 KN-T8 KN-T6	100	$31.00	***KN-ECDORG***	Orange	48.2 x6 3.2 x 1.3 [1.90 x 2.49 x 0.05]	KN-D10 KN-D12	10	$7.50
KN-ECT6GRY-25	Gray			25	$6.75	***KN-ECDRED***	Red				$7.50
KN-ECT6BLU	Blue			10	$3.75	***KN-ECDYEL***	Yellow				$7.50
KN-ECT6BLK	Black				$3.75	***KN-ECTL***	Gray	54.7 x 87.1 x 1.3 [2.15 x 3.43 x 0.05]	KN-TL14	10	$4.25
KN-ECT6BRN	Brown				$3.75	***KN-ECTLS***	Grayy	54.7 x 72.8 x 1.2 [2.15 x 2.87 x 0.05]	KN-TL14S	10	$5.25
KN-ECT6GRN	Green				$3.75	***KN-ECDG12***	Gray	48.0 x 71.4 x 1.2 [1.89 x 2.81 x 0.05]	KN-DG12	10	$5.25
KN-ECT6ORG	Orange				$3.75	***KN-ECTG12***	Gray	62.5 x 87.5 x 1.2 [2.46 x 3.44 x 0.05]	KN-TG12	10	$5.25
KN-ECT6RED	Red				$3.75	***KN-ECMGRY***	Gray	28.1 x 27.0 x 3.0 [1.11 x 1.06 x 0.12]	KN-M12 KN-M10	100	$65.00
KN-ECT6WHT	White				$3.75	***KN-ECMGRY-10***	Gray			10	$6.75
KN-ECT6YEL	Yellow				$3.75	***KN-ECMBLU***	Blue				$6.75
KN-ECT4GRY	Gray	45.7 x 52.8 x 1.2 [1.80 x 2.08 x 0.05]	KN-T4	25	$15.00	***KN-ECMGRN***	Green Yellow	28.1 x 27.0 x 3.0 [1.11 x 1.06 x 0.12]	KN-MG12 KN-MG10	10	$6.75
KN-ECT4BLU	Blue			10	$6.25	***KN-ECG12SP4***	Green Yellow	39.7 x 57.1 x 1.2 [1.56 x 2.25 x 0.05]	KN-G12SP4	10	$5.25
KN-ECDGRY	Gray	48.2 x 63.2 x 1.3 [1.90 x 2.49 x 0.05]	KN-D10 KN-D12	25	$16.00	***KN-ECT12SP4***	Gray	39.7 x 57.1 x 1.2 [1.56 x 2.25 x 0.05]	KN-T12SP4	25	$13.50
KN-ECDBLU	Blue			10	$7.50	***KN-ECF10***	Gray	27.3 x 59.6 x 1.2 [1.07 x 2.35 x 0.05]	KN-F10	25	$17.50
KN-ECDBLK	Black				$7.50	***KN-ECKBD***	Gray	37.1 x 53.5 x 1.2 [1.46 x 2.11 x 0.05]	KN-KDB10	10	$6.75
KN-ECDGRN	Green				$7.50						

Product data sheet

Specifications

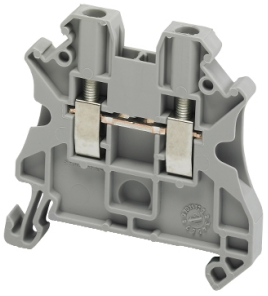

Terminal block, Linergy TR, grey, 2.5mm², passthrough, 2 points, set of 10

NSYTRV22

Product availability: Stock - Normally stocked in distribution facility

Main

Range	Linergy
Product name	Linergy TR
Product or Component Type	Terminal block
Device short name	TRV
Accessory / separate part category	Connection accessory
Terminal block type	Passthrough
Terminal block level	1
Mounting Mode	Clip-on
Nominal cross section	0.004 in² (2.5 mm²)
Length	1.9 in (47.7 mm)
color	Gray
Quantity per Set	Set of 50

Complementary

Width	0.2 in (5.2 mm)
Height	1.9 in (47.5 mm)
Connections - terminals	1 x screw terminal upstream M3) 1 x screw terminal downstream M3)
number of connections	2
Connection position	Sideways
Number of measurement input	2
Cable cross section	0.0002…0.006 in² (0.14…4 mm²), solid with cable end 0.0003…0.004 in² (0.2…2.5 mm²), flexible with cable end 0.0002…0.006 in² (0.14…4 mm²), solid without cable end 0.0002…0.006 in² (0.14…4 mm²), flexible without cable end
Tightening torque	4.4…5.3 lbf.in (0.5…0.6 N.m)
Wire stripping length	0.4 in (9 mm)
Tool type	Connection screwdriver Disconnection screwdriver
[Ue] rated operational voltage	1000 V EN/IEC 60947-7-1 600 V CSA 600 V UL
Line Rated Current	24 A EN/IEC 60947-7-1 20 A UL 20 A CSA

Price is “List Price” and may be subject to a trade discount – check with your local distributor or retailer for actual price.

Disclaimer: This documentation is not intended as a substitute for and is not to be used for determining suitability or reliability of these products for specific user applications

Material	Polyamide 6/6: insulating case Copper alloy: connector and screw Copper alloy: commoning link Chromium-nickel steel: spring
Dielectric loss	0.01 at 1 MHz IEC 60250 0.01 at 1 MHz VDE 0303-T4
Dielectric constant	3.7 at 1 MHz
Resistivity	10000 MΩ.m IEC 60093 10000 MΩ.m VDE 0303-T30
Surface resistance	1000 GΩ IEC 60093 1000 GΩ VDE 0303-T30
Creep resistance	500 CTI (> 400 kB) IEC 60093 500 CTI (> 400 kB) VDE 0303-T30
Flame retardance	V0 0.03 in (0.8 mm) UL 94
Product Weight	0.3 oz (8.2 g)
Range compatibility	PrismaSeT G PrismaSeT P PrismaSet HD PrismaSeT Pack 250 PanelSeT Mureva PrismaSeT XS TeSys Thalassa Thalassa TBP Thalassa
Product Compatibility	Spacial enclosures

Environment

Product Certifications	VDE UL DNV CSA GL
Dielectric strength	1000 V IEC 60243-1
Ambient air temperature for operation	-40…266 °F (-40…130 °C) IEC 60216-1 -40…266 °F (-40…130 °C) VDE 0304-T21

Ordering and shipping details

Category	US10CP521715
Discount Schedule	0CP5
GTIN	3606480531798
Returnability	Yes
Country of origin	DE

Packing Units

Unit Type of Package 1	PCE
Nbr. of units in pkg.	1
Package 1 Height	0.28 in (0.700 cm)
Package 1 Width	1.89 in (4.800 cm)
Package 1 Length	1.89 in (4.800 cm)
Package weight(Lbs)	0.247 oz (7.000 g)
Unit Type of Package 2	BB1

Number of Units in Package 2	50
Package 2 Height	2.17 in (5.500 cm)
Package 2 Width	2.36 in (6.000 cm)
Package 2 Length	10.63 in (27.000 cm)
Package 2 Weight	13.827 oz (392.000 g)
Unit Type of Package 3	S06
Number of Units in Package 3	12100
Package 3 Height	29.53 in (75.000 cm)
Package 3 Width	23.62 in (60.000 cm)
Package 3 Length	31.50 in (80.000 cm)
Package 3 Weight	239.934 lb(US) (108.832 kg)

Contractual warranty

Warranty	18 months

Environmental Data

Schneider Electric aims to achieve Net Zero status by 2050 through supply chain partnerships, lower impact materials, and circularity via our ongoing “Use Better, Use Longer, Use Again” campaign to extend product lifetimes and recyclability.

Environmental Data explained >

How we assess product sustainability >

Environmental footprint

Carbon footprint (kg CO2 eq, Total Life cycle)	5
Environmental Disclosure	Product Environmental Profile

Use Better

Materials and Substances

Packaging made with recycled cardboard	Yes
Packaging without single use plastic	Yes
EU RoHS Directive	Compliant with Exemptions
SCIP Number	8e5413ff-f1a1-4909-ad03-977097e33bd2
REACh Regulation	REACh Declaration
California proposition 65	WARNING: This product can expose you to chemicals including: Lead and lead compounds, which is known to the State of California to cause cancer and birth defects or other reproductive harm. For more information go to www.P65Warnings.ca.gov
Halogen content performance	Halogen free plastic parts product

Use Again

Repack and remanufacture

Circularity Profile	No need of specific recycling operations
Take-back	No
WEEE Label	The product must be disposed on European Union markets following specific waste collection and never end up in rubbish bins.

Data Gathered 2021 - Miscellaneous DIN terminals

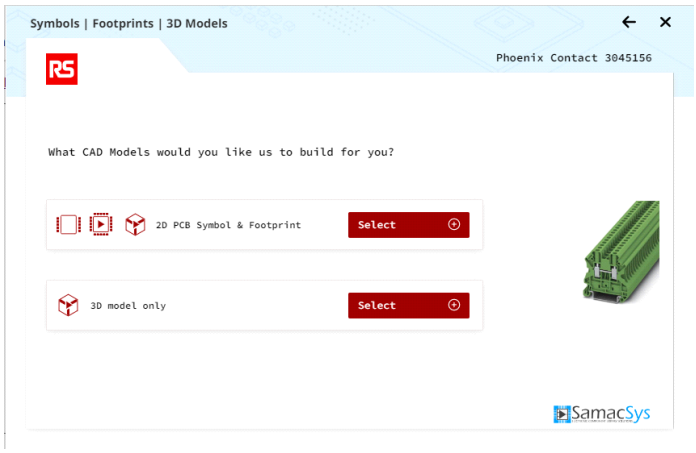

RS components offers DIN terminals with the Phoenix Contact brand, and downloadable CAD models.
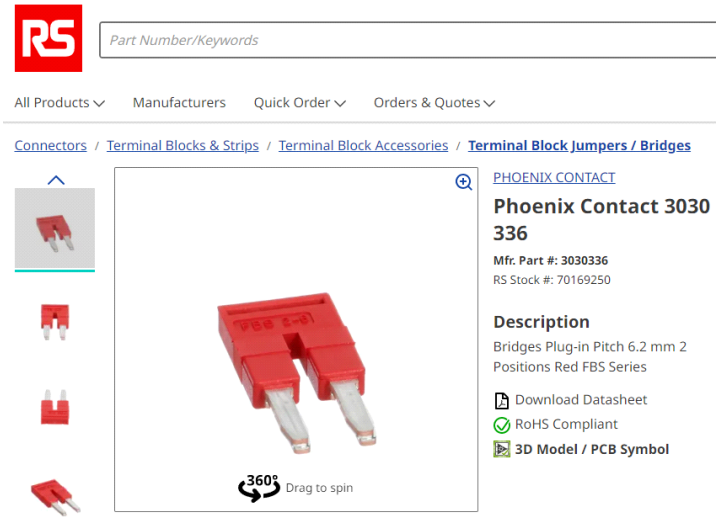
The compatible jumper pin for Phoenix-brand terminals is 3030 306.