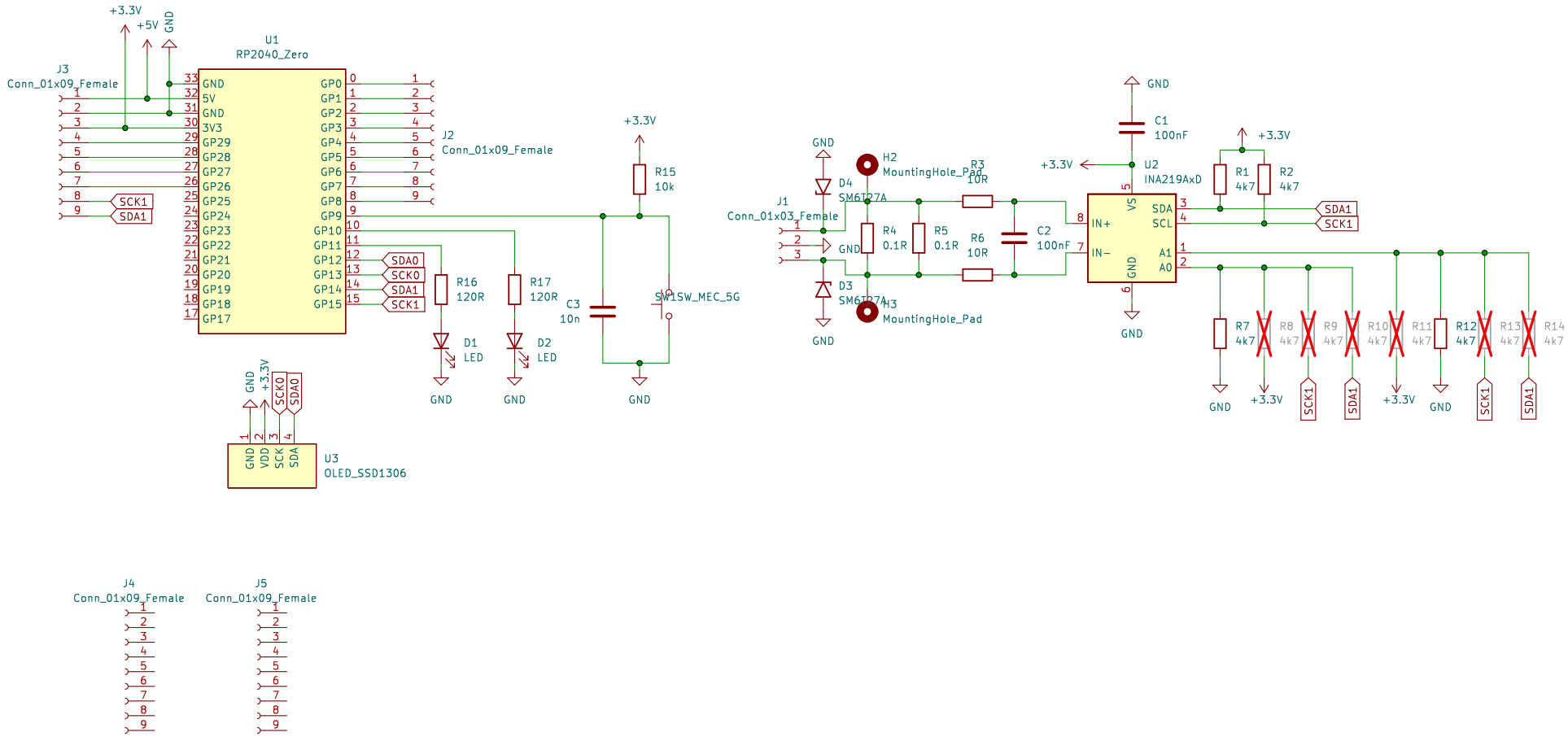

Per-Simon Saal

Sheet: /

File: PPPM.kicad_sch

Title: Pi_Pico_Power_Meter

Size: A4	Date: 2023-01-23	Rev: V2301
KiCad E.D.A. kicad 7.0.5		Id: 1/1