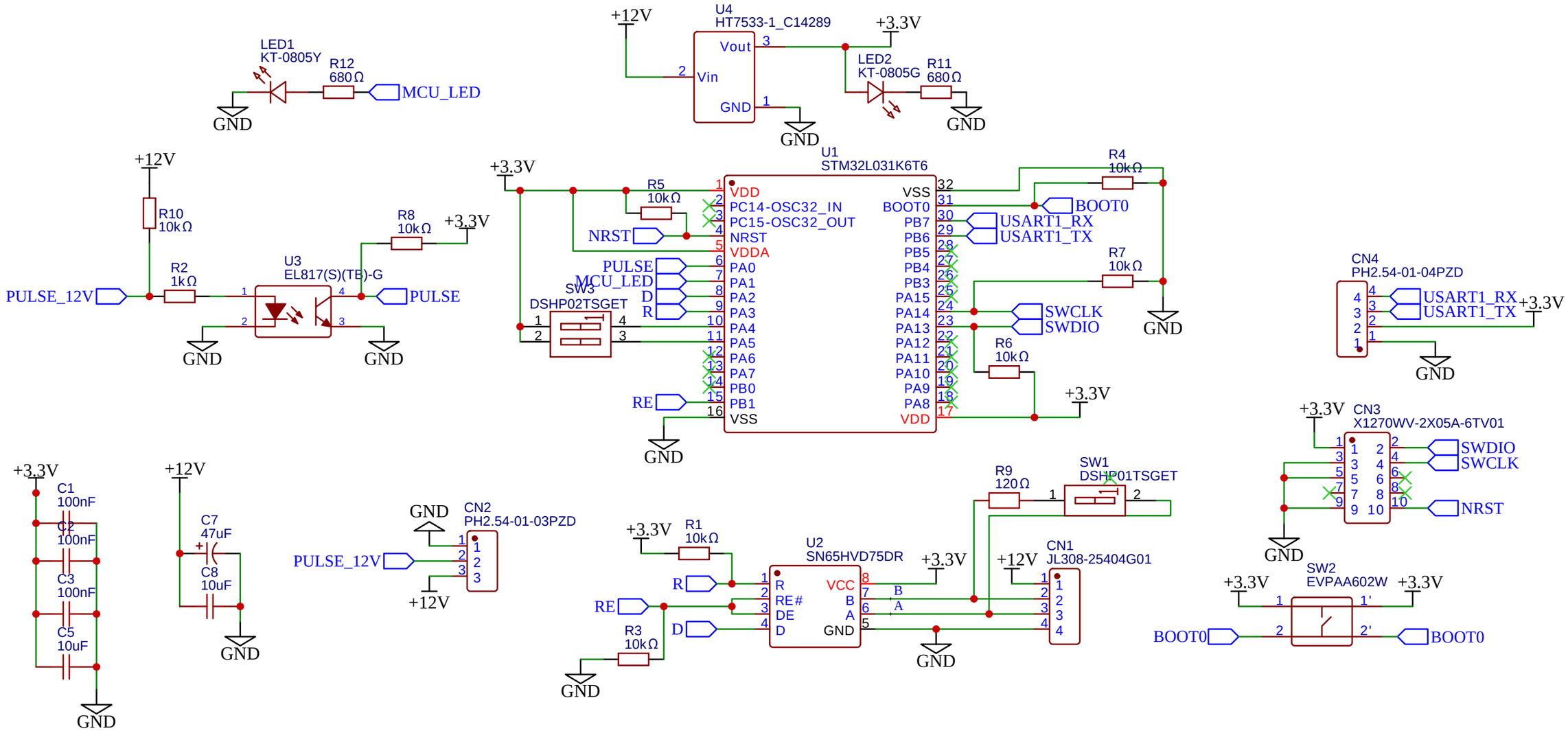

TITLE: STM32L051 Pulse Counter	REV: 1.0
Company: none	Sheet: 1/1
Date: 2025-07-20	Drawn By: Damjan Marion

EasyEDA