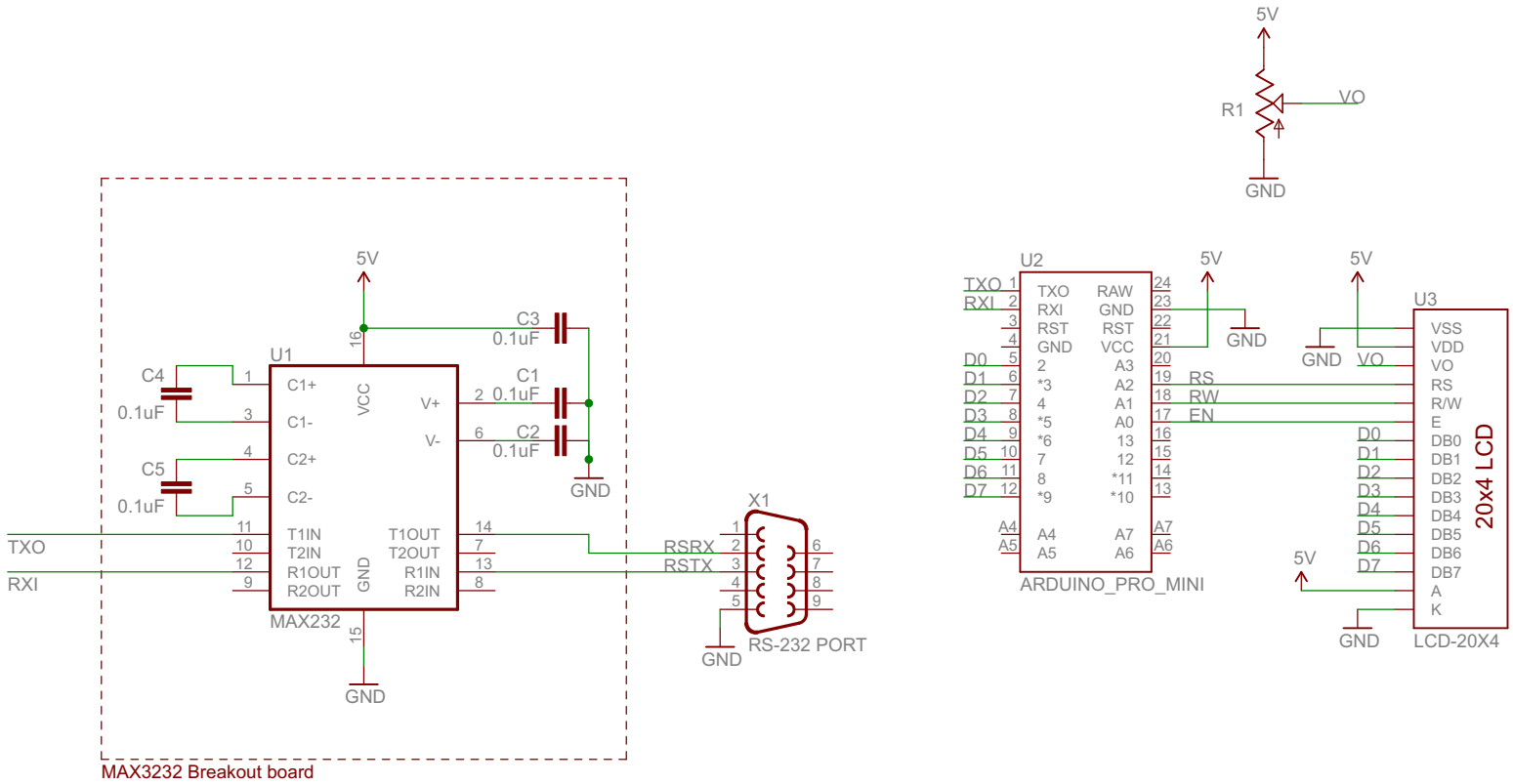

TITLE: LCDSerialBackpack	
Drawn By: David Bonsall	REV:
Date: 8/9/2014 3:58:28 PM	Sheet: 1/1