For illustration purposes only. Not an engineering reference.

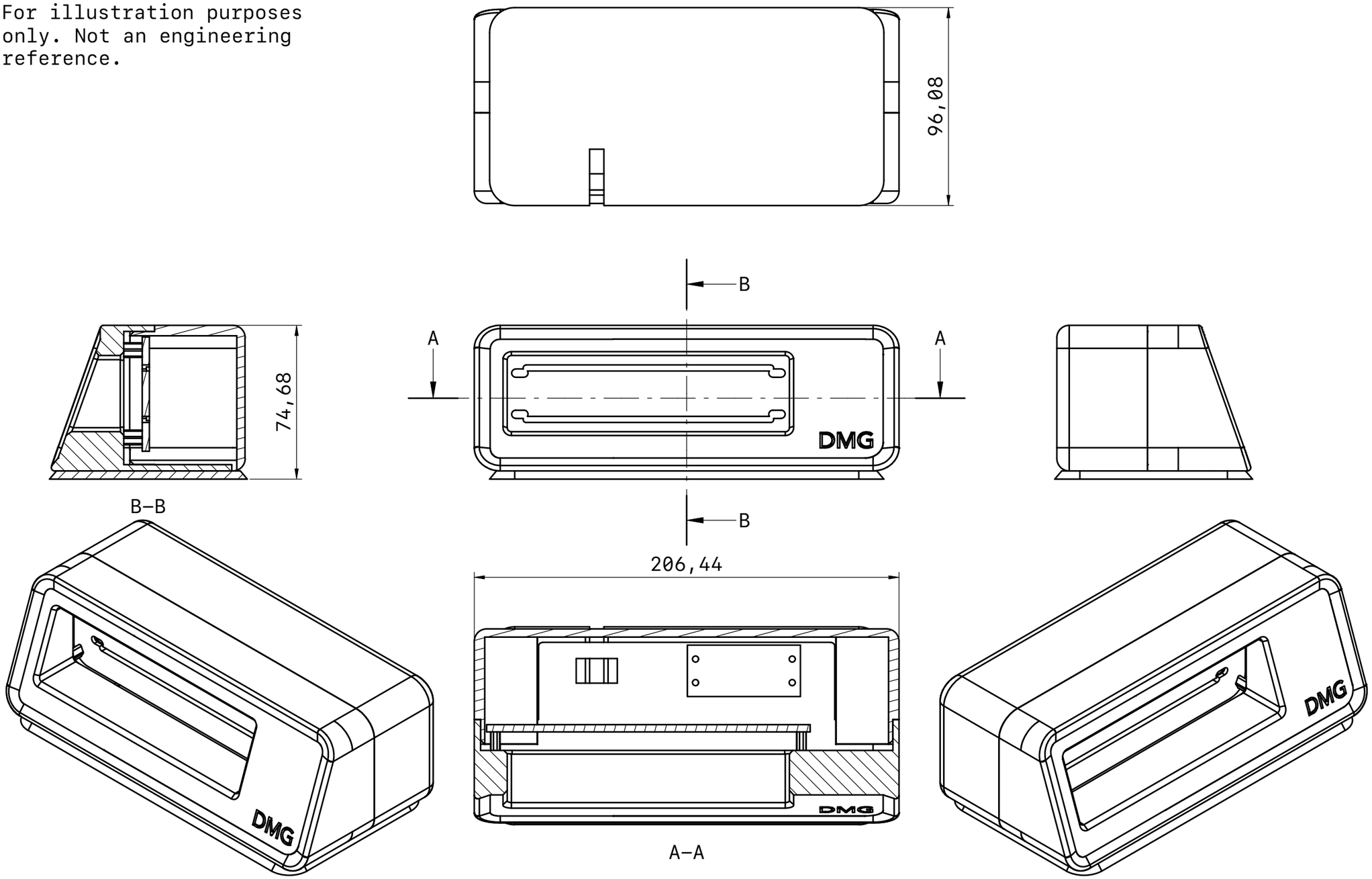

TITLE		
DMG–DN40		
UNITS mm	PROJ. ANG.	SIZE A3
SCALE 1:2	LAST UPDATED 04/19/26	SHEET 1/1