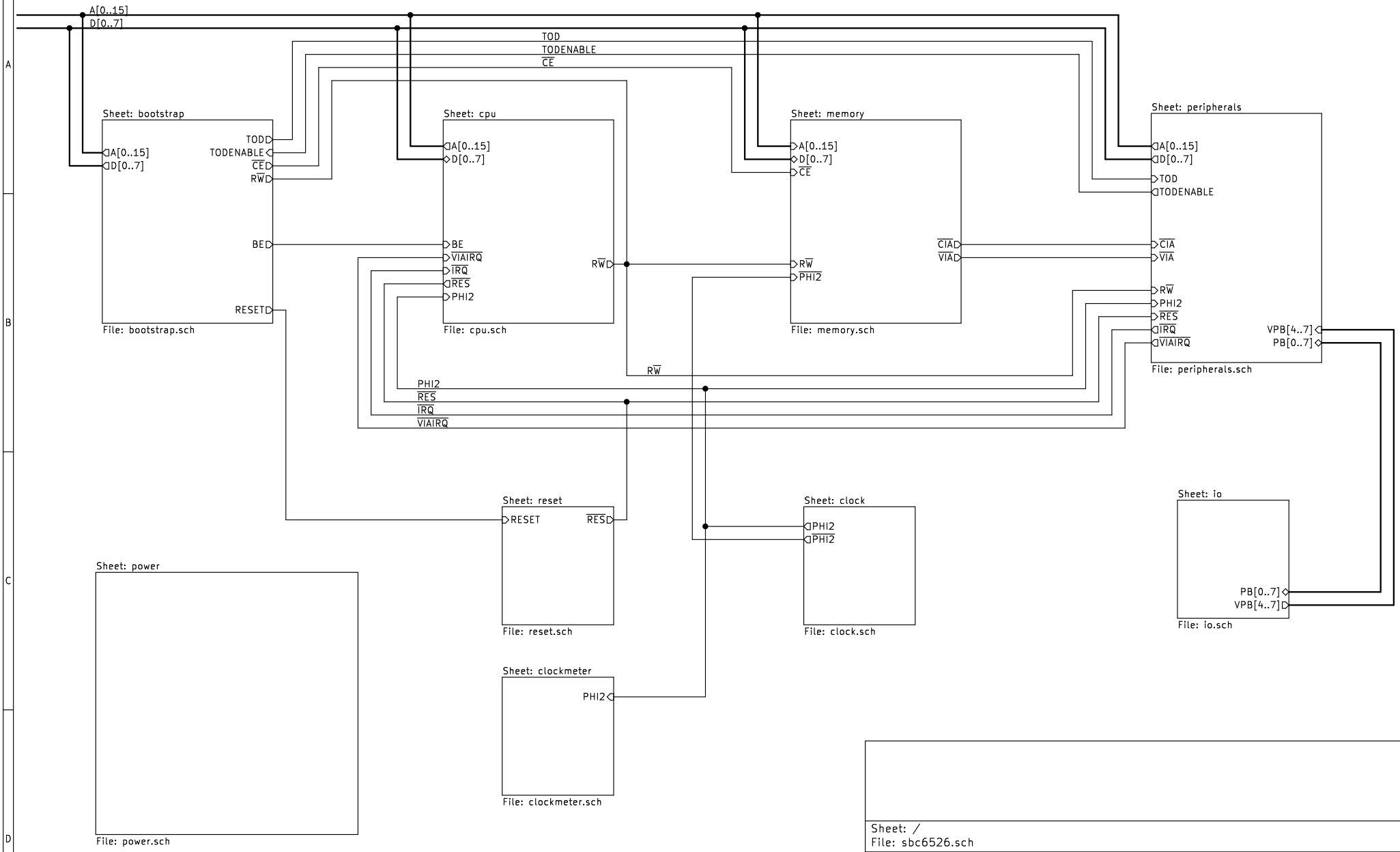

Sheet: /
File: sbc6526.sch

Title:

Size: A4	Date:	**Rev:**
KiCad E.D.A. kicad (5.1.7)-1		Id: 1/10

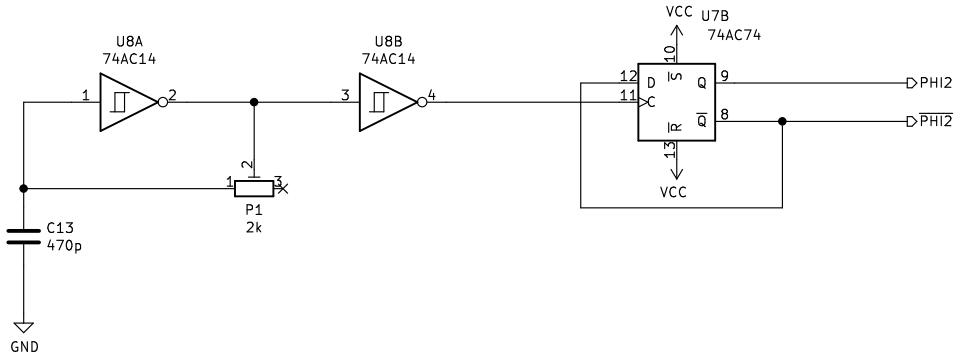

Sheet: /clock/
File: clock.sch

Title:

Size: A4	Date:	**Rev:**
KiCad E.D.A. kicad (5.1.7)-1		Id: 2/10

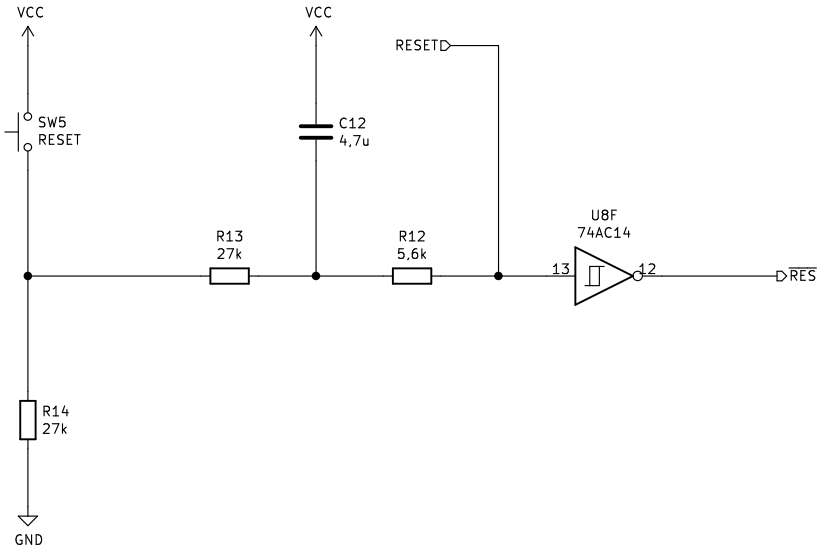

Sheet: /reset/
File: reset.sch

Title:

Size: A4	Date:	**Rev:**
KiCad E.D.A. kicad (5.1.7)-1		Id: 3/10

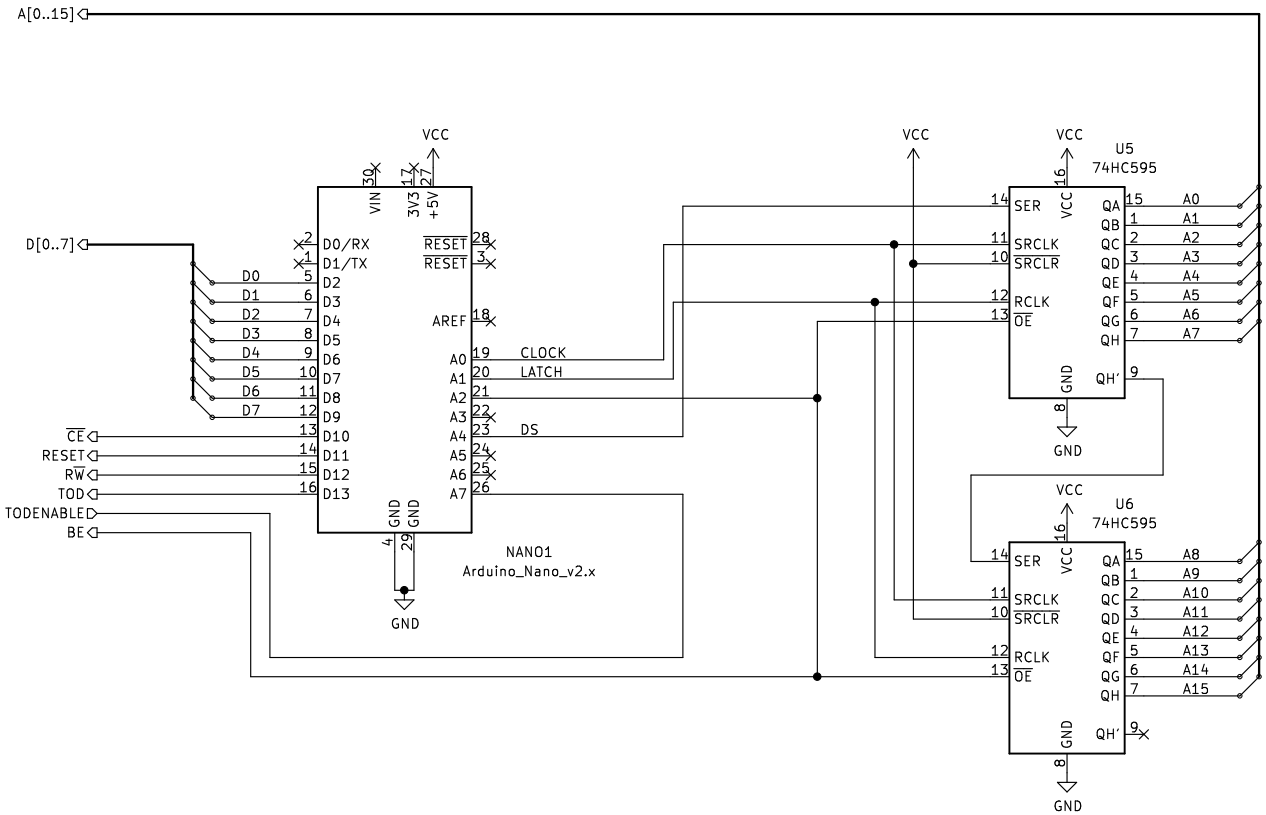

Sheet: /bootstrap/
File: bootstrap.sch

Title:

Size: A4	Date:	Rev:
KiCad E.D.A. kicad (5.1.7)-1		Id: 4/10

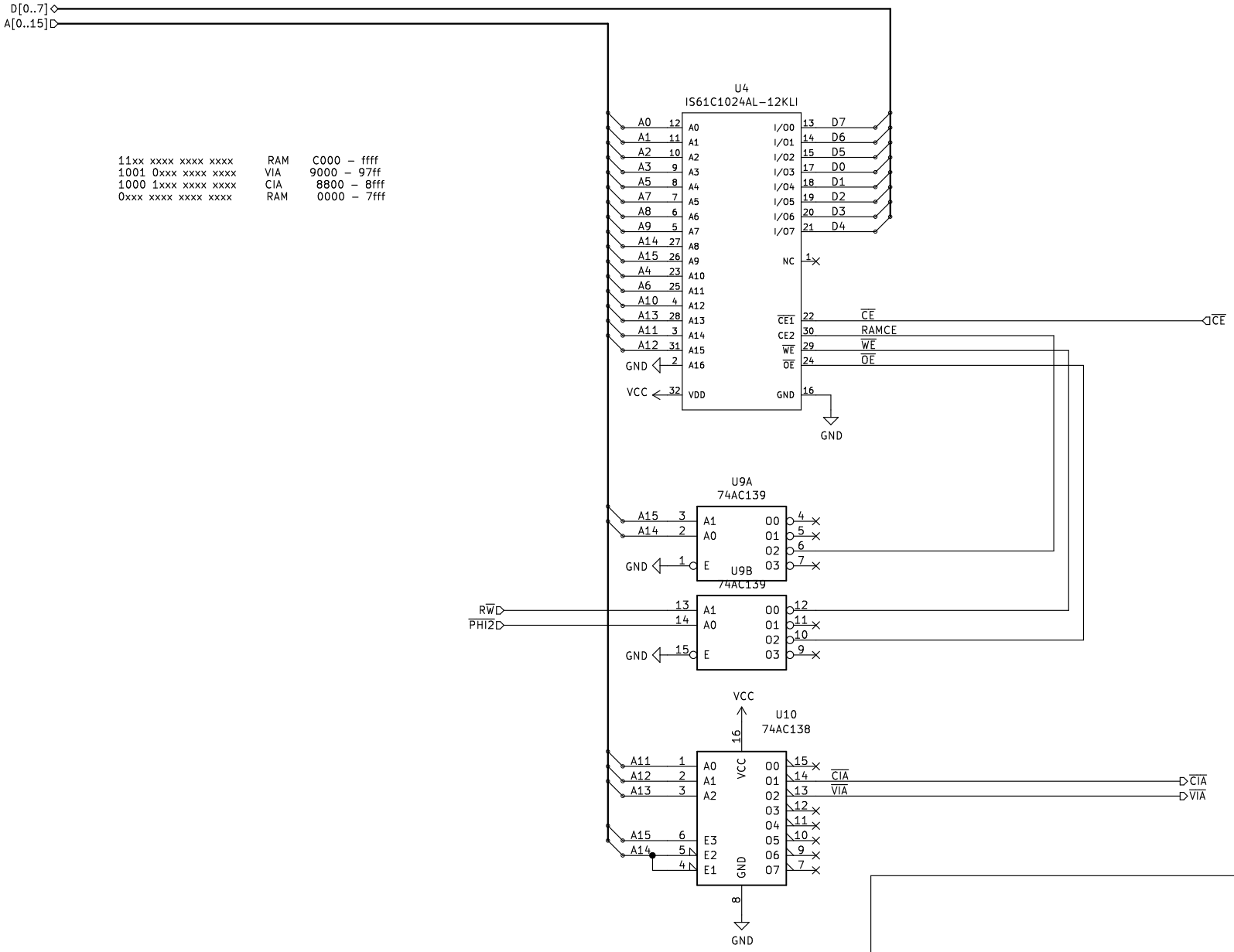

Sheet: /memory/
File: memory.sch

Title:

Size: A4	Date:	**Rev:**
KiCad E.D.A. kicad (5.1.7)-1		Id: 5/10

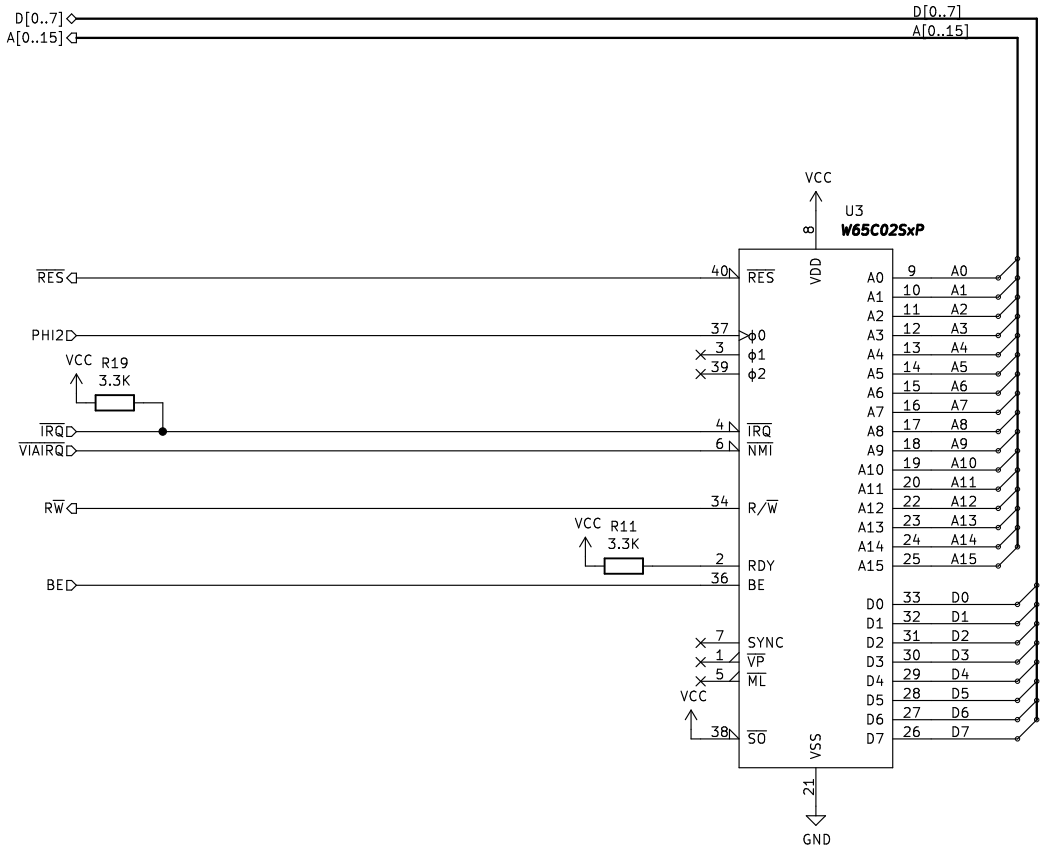

Sheet: /cpu/
File: cpu.sch

Title:

Size: A4	Date:	Rev:
KiCad E.D.A. kicad (5.1.7)-1		Id: 6/10

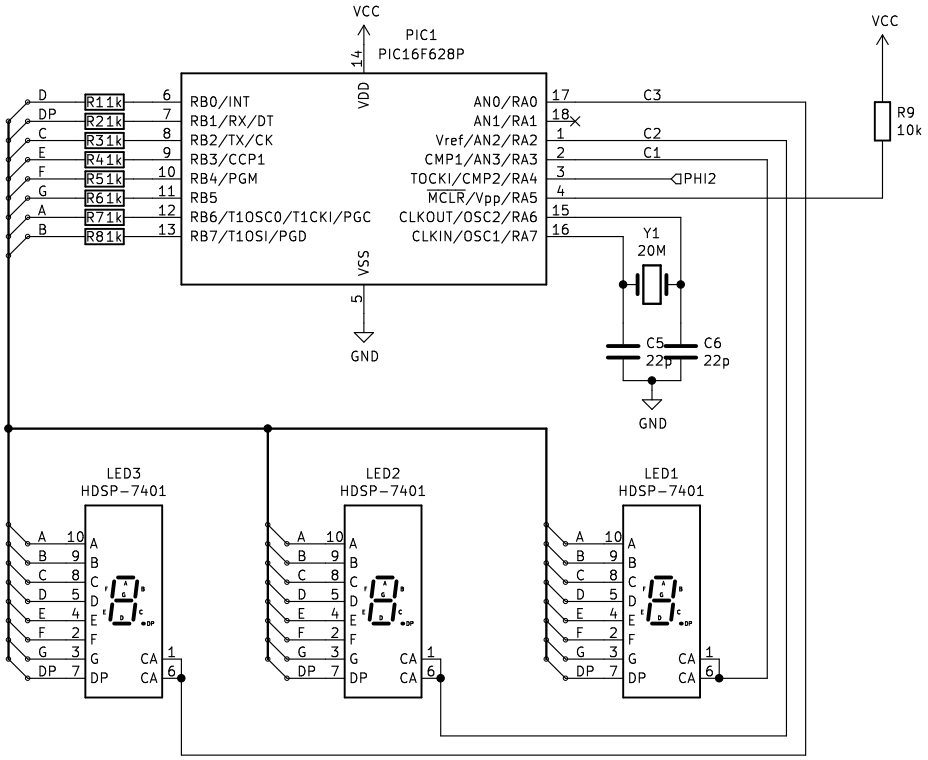

Sheet: /clockmeter/
File: clockmeter.sch

Title:

Size: A4	Date:	**Rev:**
KiCad E.D.A. kicad (5.1.7)-1		Id: 7/10

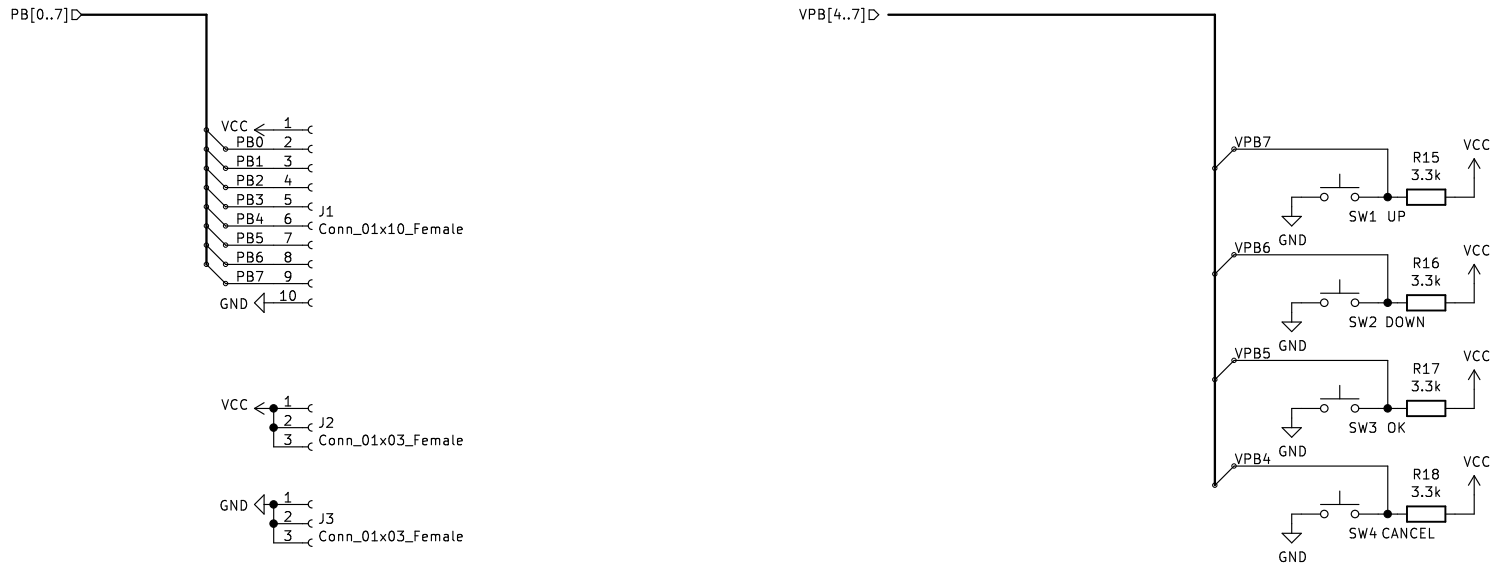

Sheet: /io/
File: io.sch

Title:

Size: A4	Date:	**Rev:**
KiCad E.D.A. kicad (5.1.7)-1		Id: 8/10

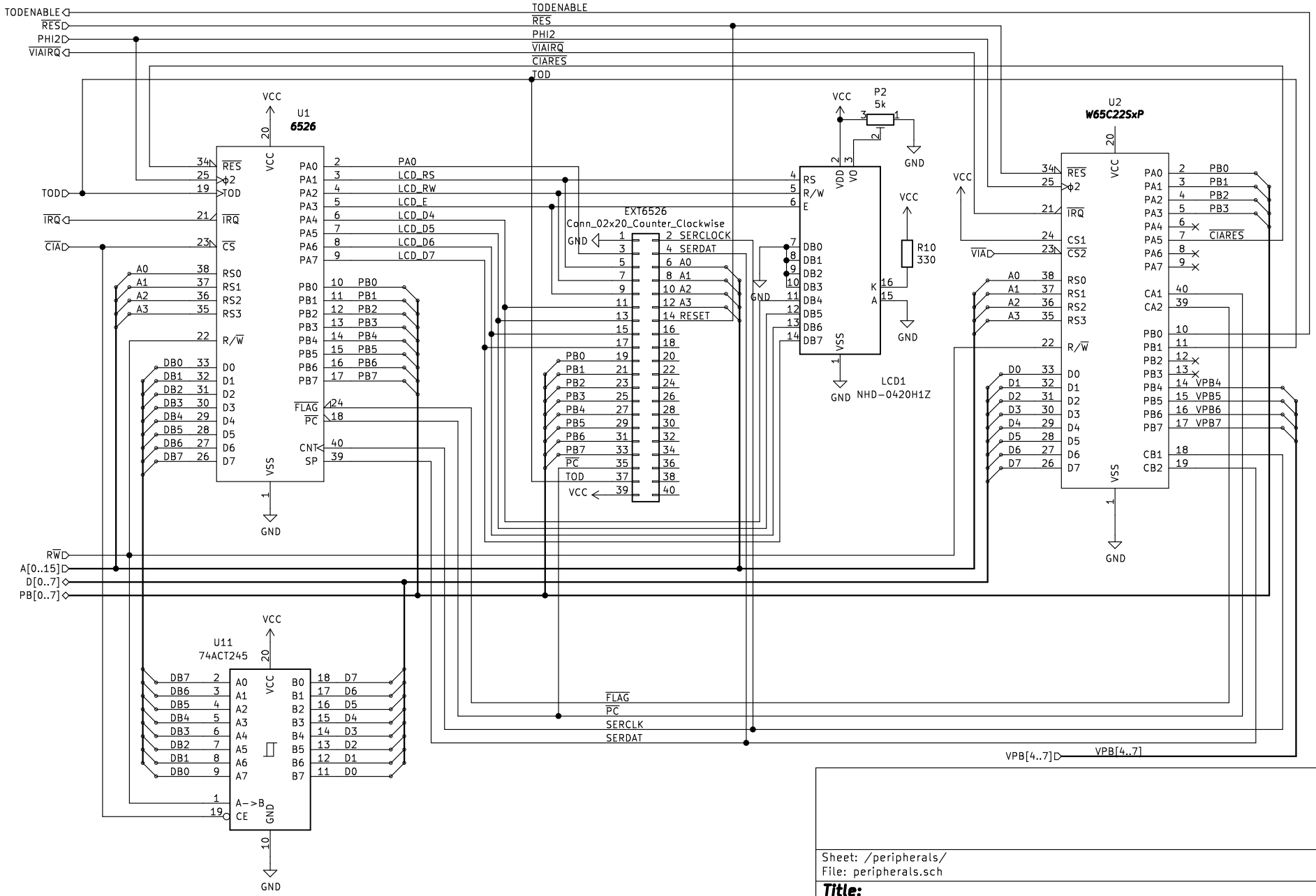

Sheet: /peripherals/
File: peripherals.sch

Title:

Size: A4	Date:	Rev:
KiCad E.D.A. kicad (5.1.7)-1		Id: 9/10

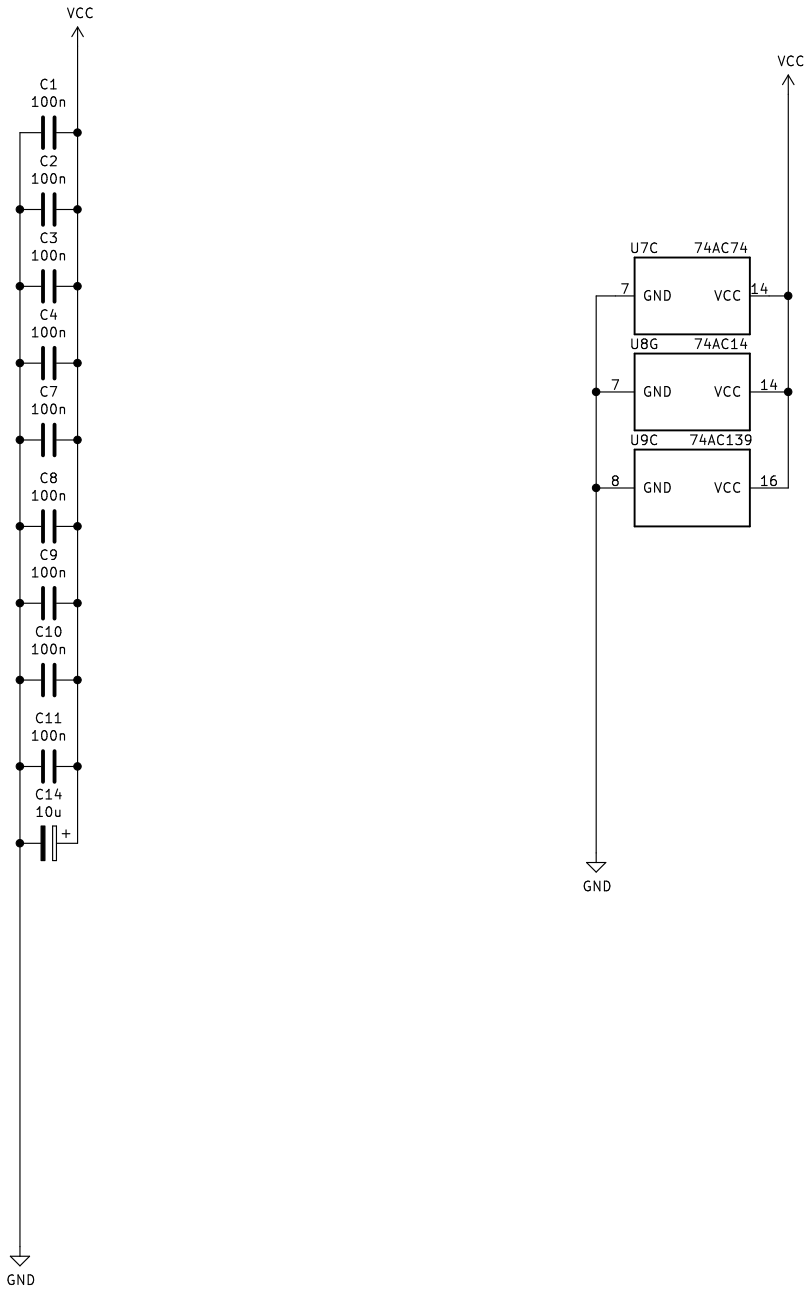

Sheet: /power/
File: power.sch

Title:

Size: A4	Date:	**Rev:**
KiCad E.D.A. kicad (5.1.7)-1		Id: 10/10