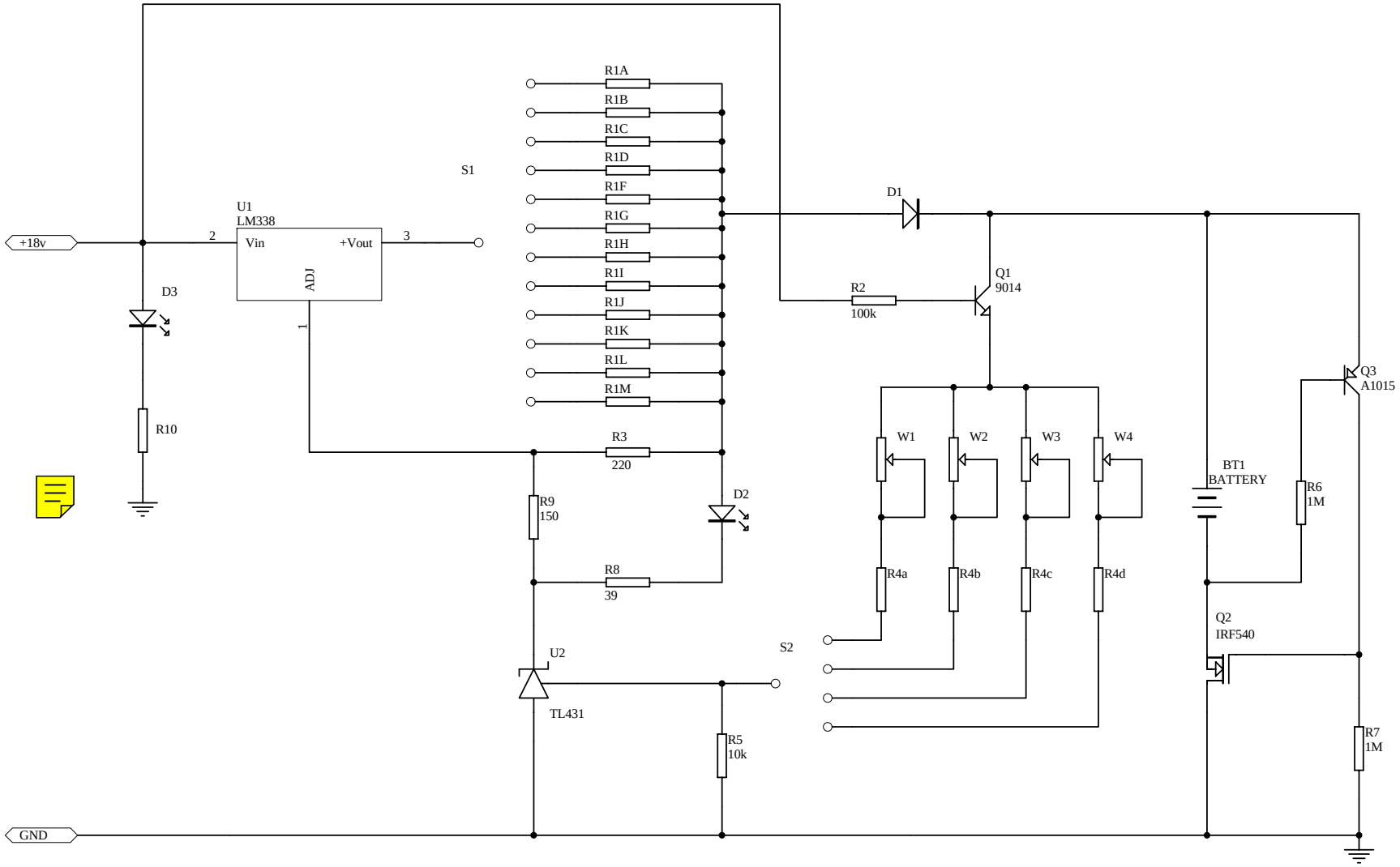

Title		
Size A4	Number	Revision
Date: 18-Mar-2007	Sheet of	
File: D:\系统相关文件目录\My Documents\My Designs\锂电池充电器.ddb		