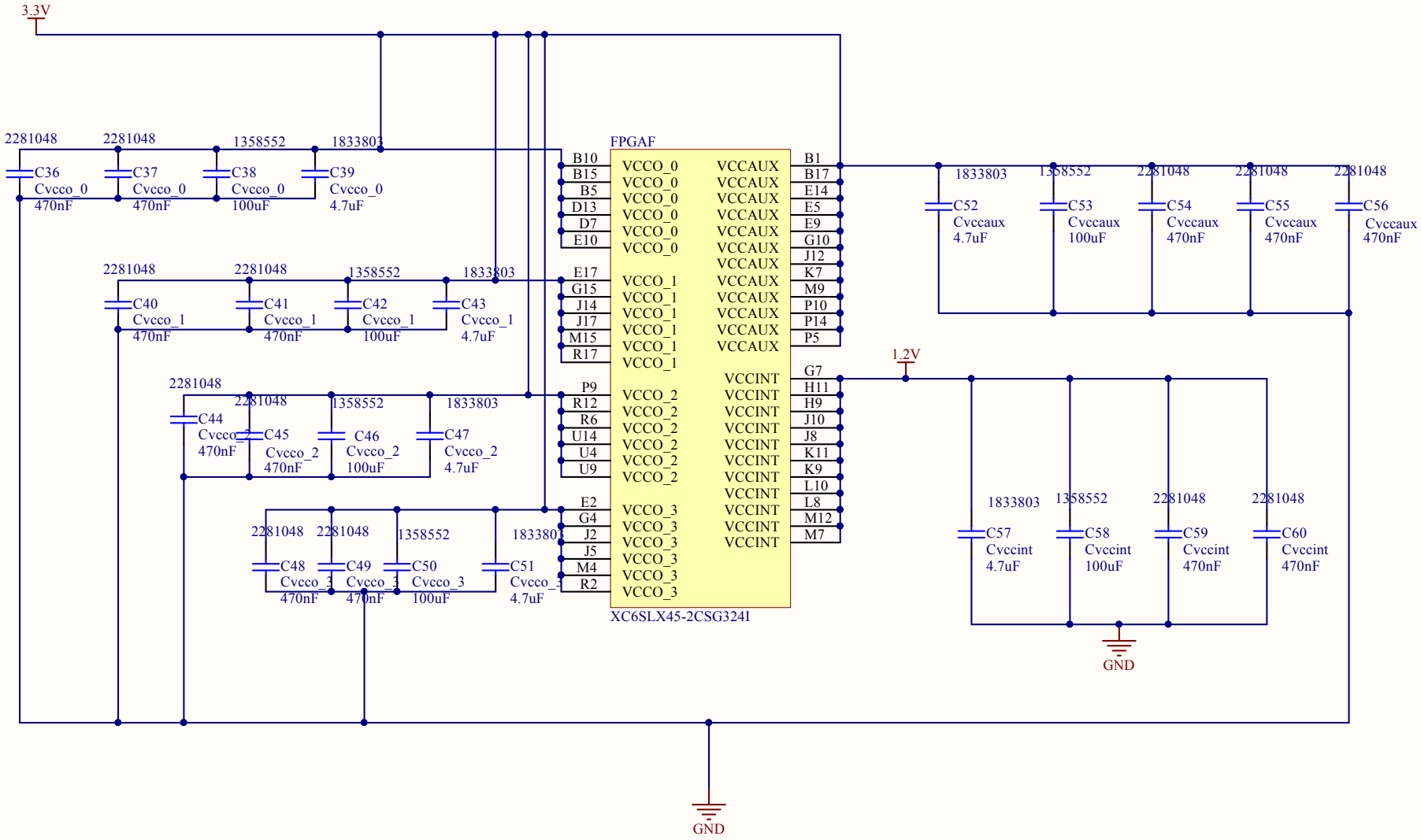

Title		
Size A	Number	Revision
Date: 11/4/2014		Sheet of
File: C:\Users\..\FPGA_VCC.SchDoc		Drawn By: