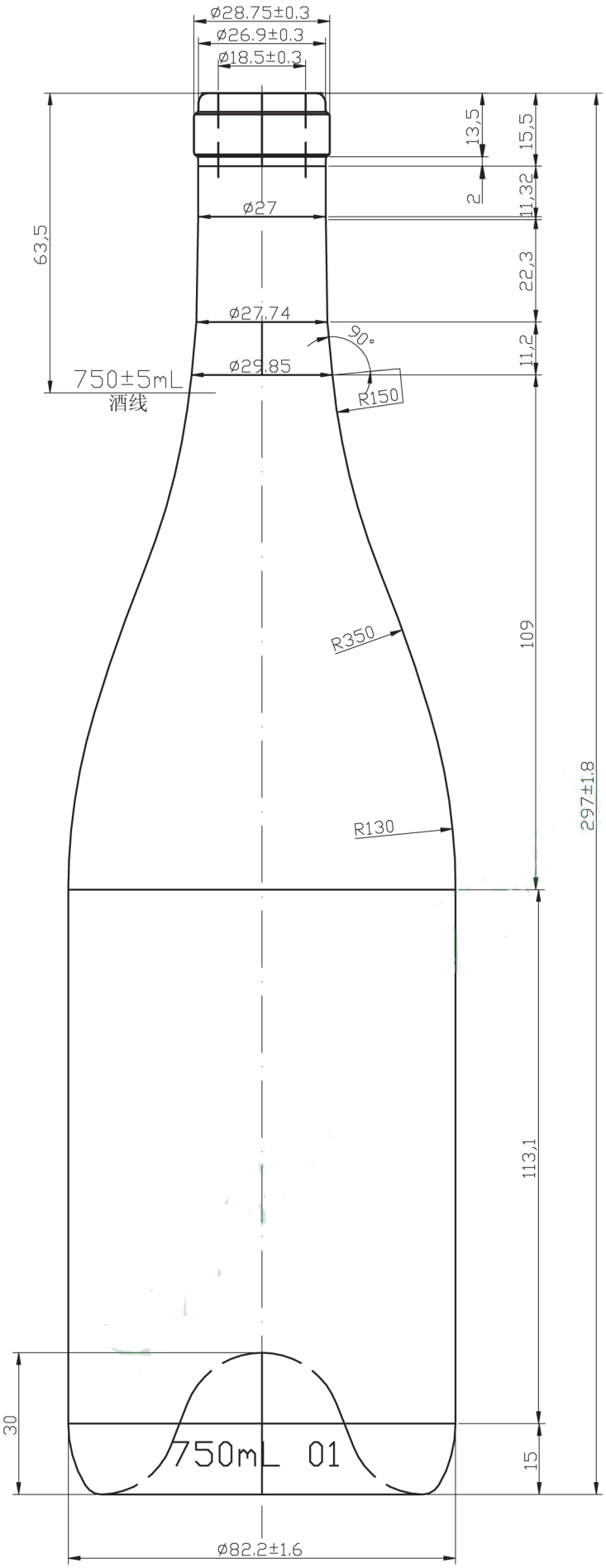

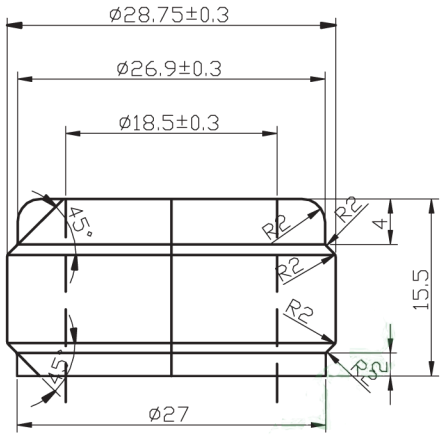

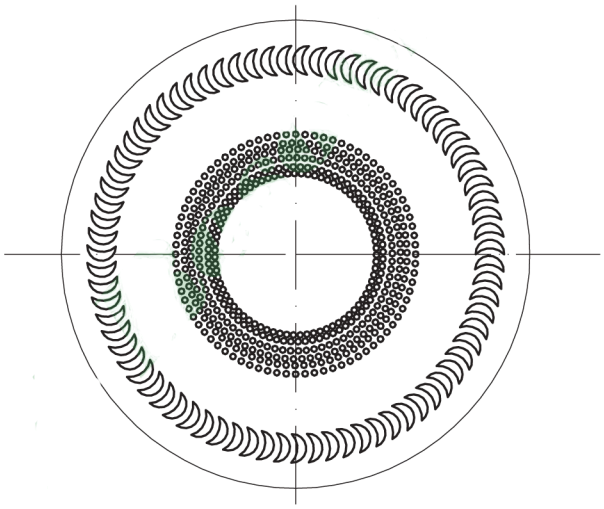

Item		Specification
Capacity		750±10mL
Brim.Cap.		770±10mL
Weight		535±15g
Height		297±1.8mm
Diameter		82.2±1.6mm
Neck Finish	Thread Diameter	
	Finish Height	
	Outside Diameter	28.75±0.3mm
	Inner Diameter	18.5±0.3mm

Design		M1:1
Drawn		
Check		
Item No.	SPI-2006	
Product	750 ml Burgundy	