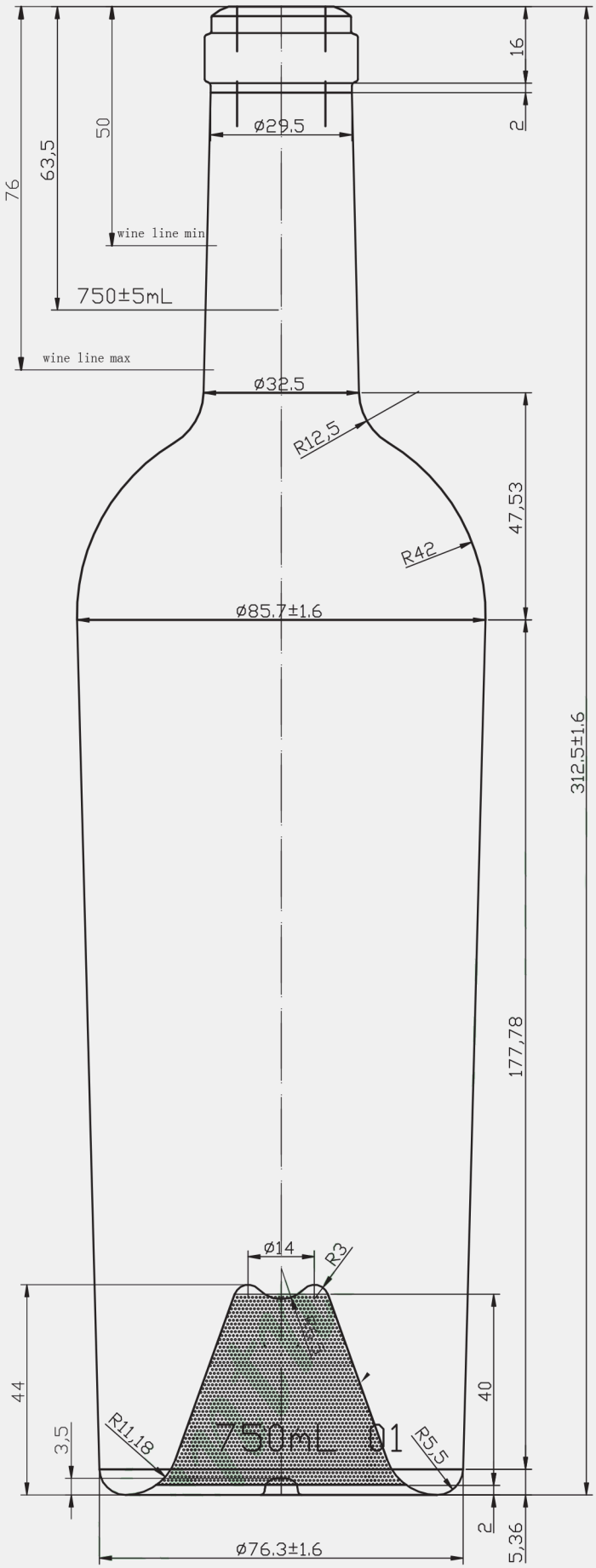

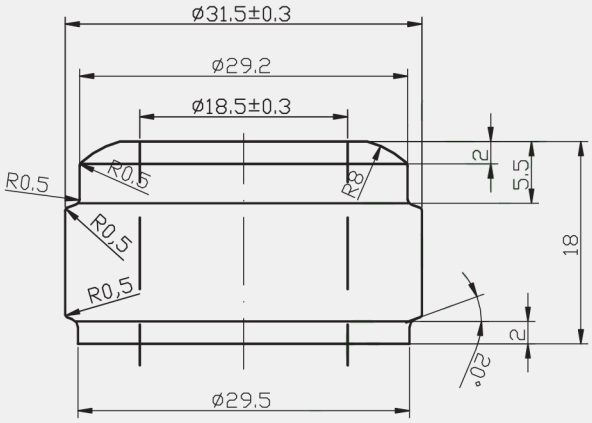

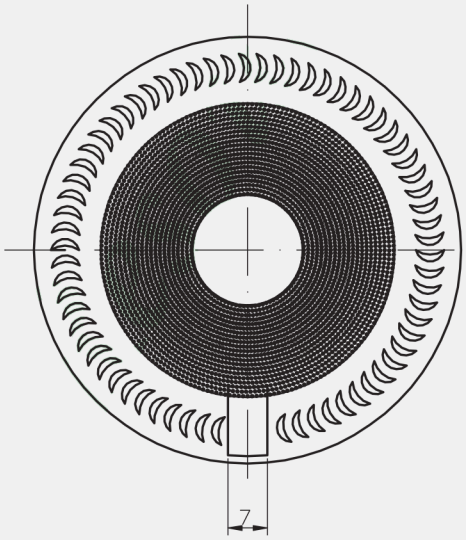

Item		Specification
Capacity		750 mL
Brim.Cap.		772±10mL
Weight		880±25g
Height		312.5±1.6mm
Diameter		85.7±1.6mm
Finish		
Neck	Outside Diameter	31.5±0.3mm
	Inner Diameter	18.5±0.3mm

Date	2009. 02. 6	
Design		M1:1
Drawn		
Check		
Item No.	SPI-1316	
Product	750 ml Bordeaux	