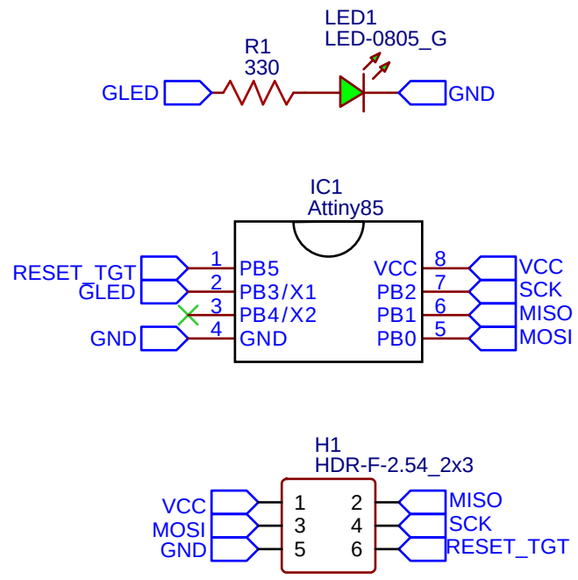

Header pins swapped due to mirroring from bottom of board

TITLE: ATTinyX5 ICSP Programmer		REV: 1.0
	Company: Braining	Sheet: 1/1
	Date: 2020-09-01 Drawn By: Devin Watson	