GENERAL

1. ALL WORK SHALL COMPLY WITH CALIFORNIA CODE OF REGULATIONS 2019 TITLE 24, 2017 N.E.C., & 2019 C.E.C. AND LOCAL CODES. ELECTRICAL WORK SHALL COMPLY WITH CBC 2019 AND ALL EQUIPMENT AND SYSTEMS SHALL BE U.L. LISTED.

2. DRAWINGS ARE NECESSARILY DIAGRAMMATIC BY THEIR NATURE AND ARE NOT INTENDED TO SHOW EVERY CONNECTION IN DETAIL OR EVERY PIPE OR CONDUIT IN ITS EXACT LOCATION. CAREFULLY INVESTIGATE STRUCTURAL AND FINISH CONDITIONS AND COORDINATE THE SEPARATE TRADES IN ORDER TO AVOID INTERFERENCE BETWEEN THE VARIOUS PHASES OF WORK. ORGANIZE AND LAYOUT WORK SO THAT IT WILL BE CONCEALED IN WALLS, FURRED CHASES, AND CEILINGS, ETC., IN FINISHED PORTIONS OF THE BUILDING, UNLESS SPECIFICALLY NOTED TO BE EXPOSED. INSTALL ALL WORK PARALLEL OR PERPENDICULAR TO BUILDING LINES UNLESS OTHERWISE NOTED.

3. INSTALL THE ELECTRICAL SYSTEM USING CONSTRUCTION MEANS, METHODS, AND MATERIALS IN ACCORDANCE WITH THE MANUFACTURER'S SPECIFICATIONS / INSTRUCTIONS, TRADE "BEST PRACTICES" STANDARDS, AND APPLICABLE NATIONAL AND LOCAL CODES.

4. PROVIDE ALL LABOR, MATERIALS, TOOLS, PERMITS, FEES, TRANSPORTATION, ETC REQUIRED TO PROVIDE A COMPLETE AND FULLY-FUNCTIONING ELECTRICAL SYSTEM TO THE OWNER'S SATISFACTION.

5. ALL ELECTRICAL EQUIPMENT AND DEVICES SHALL BE NEW AND SUPPLIED WITH ALL THE NECESSARY FITTINGS, ATTACHMENTS, AND ACCESSORIES FOR A COMPLETE INSTALLATION.

6. CONTRACTOR TO PROVIDE SUBMITTALS FOR ALL ELECTRICAL EQUIPMENT, ELECTRICAL MATERIALS AND LIGHTING FIXTURES FOR APPROVAL PRIOR TO ORDERING.

7. SWITCHGEAR DIMENSIONS ARE BASED ON THE APPROXIMATE DIMENSIONS OF THE MANUFACTURER SPECIFIED IN THE PLANS. IT IS THE CONTRACTORS RESPONSIBILITY TO VERIFY THE EQUIPMENT WILL FIT IN THE ACTUAL SPACE PRIOR TO ORDERING THE EQUIPMENT.

8. CONTRACTOR SHALL REVIEW THE ELECTRICAL, AND OTHER CONSULTANTS DRAWINGS PRIOR TO STARTING ANY WORK AND INFORM THE ENGINEER OF ANY DISCREPANCIES, OMISSIONS, OR IF CLARIFICATIONS ARE REQUIRED TO COMPLETE THE INSTALLATION PRIOR TO COMMENCING THE WORK. CONTRACTOR, ENGINEER, ARCHITECT AND OWNER SHALL SCHEDULE A POST BID/PRECONSTRUCTION MEETING TO REVIEW AND DISCLOSE ALL DISCREPANCIES, OMISSIONS AND/OR CLARIFICATION RELATED TO THE CONSTRUCTION DOCUMENTS AND/OR SPECIFICATIONS NOTED BY CONTRACTOR AND OR/OWNER AS PART OF THE PRECONSTRUCTION COORDINATION PROCESS.

9. REFER AND REVIEW TO THE; PLUMBING, MECHANICAL/HVAC, LOW VOLTAGE, COMMUNICATION, ACCESS CONTROL, INTERIOR DESIGN, ARCHITECTURAL AND STRUCTURAL DRAWINGS PRIOR TO, AND DURING, THE ELECTRICAL INSTALLATION TO ENSURE ALL ELECTRICAL EQUIPMENT AND ASSOCIATED DISTRIBUTION PATHWAY ARE CLEAR OF AND COORDINATED WITH THE OTHER TRADES INSTALLATION REQUIREMENTS.

10. ALL HORIZONTAL AND VERTICAL PIPING, CONDUITS, AND DUCTS IN/THROUGH ELEVATED OR ON GRADE SLABS SHALL BE INSTALLED PER THE MANUFACTURERS INSTALLATION MANUAL AND MEET THE CLEARANCES SHOWN ON DETAIL E-0.3 OR HAVE APPROVAL IN WRITING FROM THE STRUCTURAL ENGINEER OF RECORD. AVOID ANY HORIZONTAL/VERTIAL PIPING, CONDUITS AND DUCTS IN AREAS OF CONGESTED REINFORCEMENT SUCH AS COLUMNS, COLUMN CAPS AND COLUMN STRIPS.

11. PROVIDE ALL REQUIRED CONTROL WIRES, RELAYS, DISCONNECTS, STARTERS, CONDUITS, TIME SWITCHES, AND OUTLETS REQUIRED BY THE OTHER TRADES SYSTEMS AS INDICATED ON THEIR DRAWINGS. ALL ELECTRICAL WORK AND MATERIALS INDICATED IN THE ABOVE CONSULTANT'S (NOTE 8) DRAWINGS SHALL BE SUPPLIED AND INSTALLED BY THE ELECTRICAL CONTRACTOR UNDER THIS SCOPE OF WORK.

12. ALL EQUIPMENT SHALL BE LISTED BY A RECOGNIZED TESTING AGENCY AND SUPPORTED ACCORDING TO APPLICABLE OSHA REQUIREMENTS.

13. CONTRACTOR TO WARRANTY ALL WORK COMPLETED FOR A PERIOD OF ONE YEAR AFTER THE OWNER'S ACCEPTANCE DATE. ANY LABOR OR MATERIALS REQUIRED TO CORRECT FAULTY OR DEFECTIVE WORK WITHIN THE WARRANTY PERIOD SHALL BE CORRECTED AT THE EXPENSE OF THE CONTRACTOR. ANY WORKMANSHIP OR EQUIPMENT FOUND TO BE FAULTY OR DEFICIENT DURING THAT PERIOD SHALL BE CORRECTED AT ONCE, UPON WRITTEN NOTIFICATION, AT THE EXPENSE OF THE ELECTRICAL CONTRACTOR.

14. ALL BROCHURES, OPERATING MANUALS, CATALOGS, SHOP DRAWINGS, "AS-BUILTS" CONSTRUCTION DRAWINGS, ETC., SHALL BE TURNED OVER TO THE OWNER WITHIN 30 DAYS OF THE COMPLETION OF THE JOB.

15. CONTRACTOR ELECTRICAL "AS-BUILTS DRAWINGS" ARE TO INDICATE THE FINAL EQUIPMENT/DEVICE LOCATIONS, CONDUIT ROUTING, PANEL SCHEDULES, SINGLE LINE DIAGRAMS, ETC. - IN CAD OR EQUIVALENT FORMAT FOR THE OWNER'S RECORD AT THE COMPLETION OF THE JOB.

16. PROVIDE THE OWNER WITH 1 COPY OF ALL OPERATION AND MAINTENANCE MANUALS FOR LIGHTING, LIGHTING CONTROL, AND ELECTRICAL SYSTEMS.

17. LABEL ELECTRICAL SERVICE EQUIPMENT WITH THE MAXIMUM AVAILABLE FAULT CURRENT AT THE INCOMING TERMINALS OF THE EQUIPMENT PER CEC 110.24.

18. PROPERLY LABEL ALL ELECTRICAL ROOMS / CABINETS, ELECTRICAL PANELS, TIME SWITCHES, PANEL SCHEDULES, AND MULTI-GANG METERS WITH LAMINATED PLACARDS. ADDITIONALLY, PROVIDE ALL LABELING AND PLACARDS AT SPECIFIC LOCATIONS INDICATED IN THE CONTRACT DOCUMENTS.

19. CONTRACTOR SHALL VISIT THE SITE, VERIFY THE EXACT CONDITIONS RELATING TO THE WORK AND SHALL OBTAIN SUCH INFORMATION AS MAY BE NECESSARY TO PRESENT A CONCLUSIVE BID. NO ALLOWANCE SHALL BE MADE FOR ANY EXTRA EXPENSE, DUE TO FAILURE OF THE CONTRACTOR TO MAKE SUCH A FIELD VERIFICATION. BY SUBMITTING A PROPOSAL FOR THE WORK INCLUDED IN THE CONTRACT, THE CONTRACTOR SHALL BE DEEMED TO HAVE MADE THE FIELD VERIFICATION AND ACCEPTS ALL JOB SITE CONDITIONS.

20. FINAL LOCATIONS OF EQUIPMENT AND/OR DEVICES SHALL BE VERIFIED WITH THE OWNER/ARCHITECT PRIOR TO ROUGH-IN.

21. CONTRACTOR SHALL PROVIDE THE REQUIRED LABOR, MATERIAL, INSURANCE, EQUIPMENT, INSTALLATION PROCEDURES AND PRACTICES/ MEANS AND METHODS, CONSTRUCTION TOOLS AND STORAGE, TRANSPORTATION, ETC. FOR A COMPLETE AND PROPERLY OPERATING ELECTRICAL SYSTEM.

22. ALL MATERIALS SHALL BE NEW, AND OF THE SAME MANUFACTURER FOR EACH CLASS OR GROUP OF EQUIPMENT. MATERIALS SHALL BE LISTED AND APPROVED BY UNDERWRITER'S LABORATORIES, AND SHALL BEAR THE INSPECTION LABEL WHERE SUBJECT TO SUCH APPROVAL. MATERIALS SHALL MEET WITH THE APPROVAL OF THE DIVISION OF INDUSTRIAL SAFETY, AND ALL GOVERNING BODIES HAVING JURISDICTION. MATERIALS SHALL BE MANUFACTURED IN ACCORDANCE WITH APPLICABLE STANDARDS ESTABLISHED BY A.N.S.I., U.L., N.E.M.A. AND N.B.F.U. INSTALL PER MANUFACTURERS' RECOMMENDATIONS.

23. CONTRACTOR SHALL SECURE ANY PAY FOR ALL NECESSARY BUILDING PERMITS. CONTRACTOR SHALL COORDINATE TEMPORARY CONSTRUCTION REQUIREMENTS INCLUDING POWER, SECURITY, STORAGE, SAFETY, ETC. WITH ALL TRADES PRIOR TO COMMENCING CONSTRUCTION. INCLUDE ALL OF THESE COSTS IN THE BID.

24. ALL TRADE LABOR SHALL BE DISCIPLINE TRAINED, COMPETENT AND SKILLED PERSONNEL. PERFORM ALL WORK CONSISTENT WITH THE BEST POSSIBLE TRADE PRACTICES WITH ADHERENCE TO ALL OSHA GUIDELINES.

25. WHERE A CONFLICT OCCURS BETWEEN THIS SPECIFICATION AND OTHER SPECIFICATIONS ISSUED AS A PART OF THE CONTRACT DOCUMENTS, THE MORE STRINGENT REQUIREMENT SHALL PREVAIL.

26. ALL ADDENDA AND CHANGE ORDERS MUST BE APPROVED BY THE OWNER IN ADVANCE OF STARTING THE WORK.

27. CONTRACTOR SHALL SUBMIT SHOP DRAWINGS FOR ALL MAJOR PIECES OF ELECTRICAL EQUIPMENT INCLUDING, BUT NOT LIMITED TO; SWITCHBOARDS, PANELBOARDS, TRANSFORMERS, ALL LIGHTING FIXTURES AND ASSOCIATED CONTROLS. SUBMITTALS SHALL BE MADE TO THE ARCHITECT AS SOON AS IS PRACTICABLE AFTER AWARD OF CONTRACT.

POWER

1. ALL EXTERIOR ELECTRICAL EQUIPMENT SHALL BE WEATHERPROOF (MIN. NEMA 3R).

2. ALL EXTERIOR JUNCTION BOXES SHALL BE LISTED AS WEATHERPROOF WITH WEATHERPROOF COVERS.

3. ALL LIGHTING SWITCHES SHALL BE RATED FOR 120-277V, "DECORA" STYLE, AND WHITE UNLESS OTHERWISE NOTED ON THE PLANS OR OWNER'S SPECIFICATIONS.

4. ALL GENERAL USE RECEPTACLES SHALL BE NEMA 5-15R, "DECORA" STYLE, AND WHITE UNLESS OTHERWISE NOTED ON THE PLANS OR OWNER'S SPECIFICATIONS.

5. ALL RECEPTACLES IN DWELLING UNITS, GUEST ROOMS AND GUEST SUITES IN HOTELS AND MOTELS, AND CHILD CARE FACILITIES SHALL BE TAMPER- RESISTANT TYPE (NEC 406.12).

6. PROVIDE COMBINATION A.F.C.I./G.F.C.I. TYPE BREAKERS FOR ALL CIRCUITS FEEDING OUTLETS AND LIGHTS IN DINING ROOM, KITCHEN, LIVING ROOM, ETC. PER SECTION 210.12.

7. ALL OUTDOOR RECEPTACLES SHALL BE GFCI PROTECTED AND LISTED AS "WR" WEATHER RESISTANT TYPE PER CEC 406.9. OUTDOOR RECEPTACLES IN DAMP LOCATIONS SHALL HAVE WEATHERPROOF COVERS. OUTDOOR RECEPTACLES IN WET LOCATIONS SHALL HAVE "IN-USE" TYPE WEATHERPROOF COVERS.

8. NO PLASTIC ELECTRICAL BOXES ARE TO BE USED. IT IS ACCEPTABLE FOR RESIDENTIAL PER ELECTRICAL CODE AND LOCAL JURISDICTION CODE.

9. IN RATED WALLS, ELECTRICAL OUTLET BOXES SHALL NOT EXCEED 16 SQUARE INCHES PER ONE HUNDRED SQUARE FEET OF WALL. THE OUTLET SHALL BE INSTALLED MINIMUM 24" HORIZONTAL SEPERATION DISTANCE ON OPPOSITE SIDES OF A WALL.

10. RECESSED ELECTRICAL PANELS IN RATED ASSEMBLIES SHALL BE "FIREBOXED" AND CERTIFIED TO MAINTAIN THE ORIGINAL RATING OF THE WALL ASSEMBLY.

11. HALF SIZED OR TANDEM CIRCUIT BREAKERS MAY BE USED ONLY IF THE ELECTRICAL EQUIPMENT IS SPECIFICALLY LISTED TO RECEIVE SUCH DEVICES. ALL OTHER PANEL LOCATIONS - FULL SIZE CIRCUIT BREAKER MUST BE USED.

12. ALL BRANCH CIRCUIT BREAKERS SHALL BE NQOD (OR APPROVED EQUAL) AND HAVE MIN 75° RATED TERMINATION LUGS.

13. ALL BRANCH CIRCUIT BREAKERS FEEDING DWELLING UNIT LIGHTING AND POWER RECEPTACLES SHALL BE LISTED "COMBINATION TYPE AFCI" AND INSTALLED AT THE ORIGIN OF THE BRANCH CIRCUIT [210.12(A)(1)]

14. ALL PENETRATIONS (ELECTRICAL BOXES, CABLES, CONDUITS AND ETC…) THROUGH RATED ASSEMBLIES SHALL BE SEALED OR FIRE STOPPED TO MAINTAIN THE RATING OF THE ASSEMBLY WITH A LISTED FIRE STOPPING SYSTEM (I.E. 3M FIRE BARRIER OR EQUAL) IN COMPLIANCE WITH CBC SECTION 712. CONTRACTOR TO INSTALL FIRE STOPPING SYSTEM PER MANUFACTURER'S INSTRUCTIONS AND SPECIFICATIONS.

15. REFER TO ACOUSTICAL ANALYSIS / SPECIFICATIONS; PROVIDE PUTTY PADS OR OTHER SYSTEMS AS REQUIRED FOR SOUND ATTENUATION.

16. FOR DEVICES WITH SIMILAR FIRE BARRIER REQUIREMENTS. IF THE DENSITY OF OUTLET OPENINGS EXCEEDS 100 SQ. IN. FOR ANY 100 SQ.FT. OF WALL, THEN PUTTY PADS ARE REQUIRED FOR THE ENTIRE WALL.

17. PROVIDE EXPANSION AND DEFLECTION FITTINGS, WITH BONDING JUMPERS AT ALL BUILDING EXPANSION OR SEISMIC JOINT CROSSING.

18. WIRING SIZE PER CIRCUIT BREAKER TRIP SETTING AND NEC TABLE 310-16. ALL CONDUCTORS ARE MINIMUM #12 THHN/THWN-CU UNLESS OTHERWISE NOTED. MINIMUM 3/4" CONDUIT FOR PVC UNDERGROUND CONDUIT.

19. ALL WIRING TO COMPLY WITH CEC ARTICLE 300. CONDUCTORS SHALL BE INSTALLED IN CODE APPROVED RACEWAYS AS REQUIRED.

20. INTERIOR WIRING PERMITTED TO BE TYPE NM CABLE IN ACCORDANCE WITH CEC ARTICLE 334 AND LOCAL CODES IN ONE- AND TWO- FAMILY AND MULTIFAMILY DWELLINGS OF TYPE III, IV, AND V CONSTRUCTION. IN OTHER TYPES OF TYPE III, IV, AND V CONSTRUCTION NM CABLE **MAY BE ACCEPTABLE**, EXCEPT FOR EXPOSED IN ACCESSIBLE DROPPED CEILINGS, EXPOSED CEILINGS OR WHERE PROHIBITED IN CEC 334.12. CONTRACTOR TO VERIFY NM CABLE WIRING METHOD WITH AUTHORITY HAVING JURISDICTION PRIOR TO BIDDING THE JOB. MINIMUM WIRING SIZE PER THE 60 DEGREE "C" COLUMN OF CEC TABLE 310.15(B)(16) (I.E. #12 CU FOR 20A CIRCUIT BREAKERS).

21. IT IS PROHIBITED TO SHARE NEUTRAL CONDUCTORS FOR THREE SINGLE PHASE CIRCUITS PER CEC 200.4.

22. AS REQUIRED, ALL OVERSIZED FEEDERS THAT WERE ADJUSTED IN SIZE TO COMPENSATE FOR VOLTAGE DROP SHALL BE PROVIDED WITH ADAPTER LUGS OR SPLICE BOX. ADAPTER LUGS SHALL BE PROVIDED IF SIZE IS AVAILABLE, OTHERWISE PROVIDE CABLE SPLICES IN THE SPLICE BOX TO REDUCE CABLES TO THE MAXIMUM SIZE THAT THE BREAKER LUGS CAN ACCOMMODATE.

23. CLASS 2 & 3 WIRING:
CABLES INSTALLED IN PLENUMS SHALL BE TYPE CL2P OR CL3P (CLASS 2 OR 3 RESPECTIVELY).
CABLES INSTALLED AS RISERS (CABLES INSTALLED IN VERTICAL RUNS AND PENETRATING MORE THAN ONE FLOOR, OR CABLES INSTALLED IN VERTICAL RUNS IN A SHAFT) SHALL BE TYPE CL2R OR CL3R (CLASS 2 OR 3 RESPECTIVELY). CABLES INSTALLED IN CABLE TRAYS MAY BE TYPE PLTC, CL3P, CL3R, CL3, CL2P, CL2R, OR CL2.

24. WHERE MORE THAN TWO NM CABLES ARE INSTALLED THROUGH WOOD FRAMING, SUCH AS TOP OR BOTTOM PLATES WHERE THE OPENING IS SEALED WITH INSULATION OR SEALING (FIRE RATED) FOAM, ETC., THE ALLOWABLE AMPACITY OF EACH CONDUCTOR SHALL BE ADJUSTED IN ACCORDANCE WITH TABLE 310.15. REVIEW CEC 334.80.

25. ALL CABLE TRAYS CONTAINING TYPE SE, MC, MI, OR IGS SERVICE ENTRANCE CABLES MUST BE LABELED "CABLE TRAY CONTAINS SERVICE ENTRANCE CONDUCTORS".

26. ALL ELECTRICAL CONDUCTORS WITHIN 6' OF THE ATTIC MUST BE PROTECTED AS PER CEC 320.23A, 330.23, 334.23

27. ALL ELECTRICAL EQUIPMENT, BREAKERS, HOUSE PANELS, AND TIME SWITCHES DIRECTORIES SHALL BE PROPERLY TYPED LABELED.

GROUNDING

1. THE ELECTRICAL SYSTEM SHALL BE GROUNDED AND BONDED IN ACCORDANCE WITH NEC ART. 250 AS ADOPTED AND AMENDED BY THE CEC AND THE ADOPTED EDITION OF THE N.E.C. AS IT RELATES TO OTHER APPLICABLE CODES.

2. SEPARATELY DERIVED SYSTEMS SHALL BE GROUNDED PER ART. 250.30 (A) FOR GROUNDED SYSTEMS OR 250.30(B) FOR UNGROUNDED SYSTEMS AND SHALL COMPLY WITH ART. 250.20, 250.21, 250.22, AND 250.26.

3. THE MAXIMUM RESISTANCE TO GROUND SHALL NOT EXCEED 5 OHMS TO GROUND.

4. CONTRACTOR SHALL PROVIDE ALL INSTRUMENTATION AND TESTS FOR MEASURING THE RESISTANCE OF EACH PHASE TO GROUND. A PROPERLY CALIBRATED "MEGGER" TYPE INSTRUMENT SHALL BE USED. IN THE EVENT THAT HIGH RESISTANCE TO GROUNDS ARE FOUND, THEY SHALL BE ISOLATED. MAKE PROPER CORRECTIONS TO RESTORE THE RESISTANCE TO AN ACCEPTABLE VALUE. THIS SHOULD BE PROVIDED BY AN INDEPENDENT, APPROVED TESTING COMPANY.

5. ONSITE INDEPENDANT TESTING OF EQUIPMENT SHALL BE REQUIRED FOR SWITCHGEAR OVER 1,000 AMPS.

6. PROVIDE BONDED GROUND TO ALL METALLIC PIPE WITHIN THE UNIT, WHEN THERE IS NON METALLIC PIPING FEEDING INTO EACH UNIT MAKING EACH UNIT ISOLATED FROM THE MAIN PIPING SYSTEM WITHIN BUILDING. COMPLY WITH C.E.C 250.104(A)(1); 250.104(A)(2); 250.122.

7. NEUTRAL BAR SHALL BE ISOLATED FROM THE GROUNDING BUSBAR AT ALL PANELBOARDS SERVING INDIVIDUAL UNITS.

LIGHTING FIXTURES

1. IT IS THE CONTRACTOR'S RESPONSIBILITY TO VERIFY ACTUAL CEILING CONSTRUCTION TYPE AS DEFINED ON THE ARCHITECTURAL DRAWINGS AND FURNISH ALL LIGHTING FIXTURES WITH THE CORRECT MOUNTING DEVICES WHETHER OR NOT SUCH VARIATIONS ARE INDICATED BY THE FIXTURE CATALOG NUMBER. THE CONTRACTOR SHALL VERIFY DEPTH OF ALL RECESSED LIGHTING FIXTURES WITH ARCHITECTURAL DRAWINGS PRIOR TO ORDERING FIXTURES. ANY DISCREPANCIES THAT WOULD CAUSE RECESSED FIXTURES NOT TO FIT INTO CEILING SHALL BE REPORTED TO THE ARCHITECT PRIOR TO ORDERING FIXTURES. THE CONTRACTOR SHALL VERIFY THE FIXTURE VOLTAGE WITH THE LIGHTING PLAN AND ORDER FIXTURES WHICH WILL OPERATE AT THE VOLTAGE TO WHICH THEY ARE CONNECTED.

2. ALL HANDICAP UNIT LIGHTING SWITCHES, RECEPTACLES, THERMOSTATS, AND OTHER CONTROLS SHALL BE LOCATED NO HIGHER THAN +48" AND NO LOWER THAN +15". ON THE KITCHEN COUNTER OR BATHROOM LAVATORY MAXIMUM HEIGHT FOR RECEPTACLES SHALL BE +44". SEE MOUNTING DIAGRAM AS PART OF THIS SET.

3. RECESSED LIGHTING FIXTURES WITH DIRECT CONTACT WITH INSULATION SHALL BE TYPE IC (LISTED BY RECOGNIZED TESTING AGENCY). RECESSED NON-TYPE IC FIXTURES SHALL HAVE A MINIMUM OF 3" CLEAR FROM INSULATION AND 1" FROM COMBUSTIBLE MATERIALS (NON-TYPE IC RECESSED FIXTURES ARE NOT PERMITTED IN RESIDENTIAL UNITS).

4. RECESSED LIGHTING IN RATED ASSEMBLIES SHALL BE EITHER "FIREBOXED" TO MAINTAIN THE RATING OF THE ASSEMBLY OR UTILIZE A LISTED FIXTURE WITH ENCLOSURE THAT MAINTAINS THE ORIGINAL RATING OF THE ASSEMBLY.

5. LIGHT FIXTURE RECESSED IN CEILINGS WHICH HAVE A ONE HOUR OR MORE FIRE RATING SHALL BE ENCLOSED IN A BOX WHICH HAS A FIRE RATING (IC) EQUAL TO THAT OF THE CEILING. PROVIDE MINIMUM OF 3" CLEAR FROM ALL SIDES AND TOP OF ENCLOSURE TO CEILING. LIGHTING FIXTURES IN CONTACT WITH INSULATION TO BE U.L LISTED FOR THERMAL BARRIER "CHICAGO PLENM". ALL BALLASTS FOR INDOOR 4 FT. FLUORESCENT IN COMMON AREA SUCH AS RECREATION, MAINTENANCE BLDG., SHALL BE "ENERGY SAVING TYPE" CBM AND U.L. LISTED.

6. CEILING INSULATION SHALL BE INSTALLED TO ALLOW 3" MINIMUM CLEARANCE FROM SIDES AND TOP OF RECESSED LIGHT FIXTURES.

7. RECESSED LIGHTING FIXTURE IN 1 HR. RATED AREAS REQUIRE BOX BOARD SHELL MINIMIZE PENETRATIONS INTO 1 HR. WALL BETWEEN 2 DWELLING UNITS. INSTALL NMC IN CONDUIT AND SEAL WITH PLASTER, OR FIRE CAULK, INSIDE THE ENDS OF CONDUIT (TO PREVENT SPREAD OF SMOKE OR FIRE).

8. IT IS THE INTENT OF THIS PROJECT, TO USE THE HIGHEST EFFICACY LIGHTING PRODUCTS AVAILABLE AND TO USE LED (LIGHT EMITTING DIODE) TYPE LUMINARIES WITH 3000K LIGHT TEMPERATURES AS INDICATED ON THE LUMINARIES SCHEDULE.

9. WHERE SPECIFIED, FLUORESCENT BALLASTS SHALL BE ELECTRONIC TYPE. HARMONIC CONTENT SHALL NOT EXCEED 10% ADVANCE MARK V OR EQUAL.

10. WHERE SPECIFIED, FLUORESCENT AND HID BALLASTS SHALL BE HIGH POWER FACTOR BALLASTS AND FOUR PIN, 3000 DEGREE KELVIN LAMPS.

11. FLUORESCENT LAMP SHALL BE 32 WATT T8, 3000 DEGREE KELVIN, SYLVANIA OR EQUAL.

12. HIGH EFFICACY LUMINARIES SHALL BE DEFINED AS FOLLOWS: 30 LUMENS PER WATT (FOR LAMPS 5W OR LESS) 40 LUMENS PER WATT (FOR LAMPS 6W-15W) 50 LUMENS PER WATT (FOR LAMPS 16W-40W)

13. MEDIUM AND CANDELABRA BASED SCREW-IN LAMPS DO NOT QUALIFY AS HIGH EFFICACY. GU-24 PIN BASES QUALIFY AS HIGH EFFICACY

14. VERIFY MOUNTING HEIGHT OF ALL WALL MOUNTED FIXTURES WITH ARCHITECT PRIOR TO ROUGH-IN.

15. ALL WALL FIXTURES SHALL BE INSTALLED SUCH THAT THE LOWEST PORTION OF THE FIXTURE PROTRUDING > 4" IS 80" ABOVE THE FINISHED GRADE OR HIGHER.

16. REFER TO ARCHITECTURAL REFLECTED CEILING PLANS FOR EXACT LOCATION OF ALL LIGHT FIXTURES.

17. LUMINARIES FOR GENERAL LIGHTING IN KITCHEN SHALL HAVE LAMPS WITH AN EFFICACY OF NOT LESS THAN 40 LUMENS PER WATT. A LUMINAIRE WHICH IS THE ONLY LIGHTING IN A KITCHEN WILL BE CONSIDERED GENERAL LIGHTING. GENERAL LIGHTING SHALL BE CONTROLLED BY THE MOST ACCESSIBLE SWITCH(ES) IN THE KITCHEN. ADDITIONAL LUMINARIES TO BE USED ONLY FOR SPECIFIC DECORATIVE EFFECTS NEED NOT MEET THIS REQUIREMENT. U.N.O

18. EACH ROOM CONTAINING A WATER CLOSET SHALL HAVE AT LEAST ONE LUMINAIRE WITH LAMPS WITH AN EFFICACY OF NOT LESS THAN 40 LUMENS PER WATT. IF THERE IS MORE THAN ONE LUMINAIRE IN THE ROOM THE HIGH EFFICACY LUMINARIES SHALL BE SWITCHED AT AN ENTRANCE TO THE ROOM.

19. ALL RECESSED LUMINARIES IN INSULATED CEILINGS SHALL BE TESTED AND LISTED FOR ZERO CLEARANCE INSULATION COVER (IC) AND AIR TIGHT (AT) BY RECOGNIZED TESTING LABORATORIES. ELECTRICAL CONTRACTOR TO VERIFY THIS INFORMATION BEFORE PURCHASING DOWNLIGHT HOUSING.

20. WHERE LOW LEVEL EXIT SIGNS ARE SHOWN ON PLANS, THEY SHALL BE MOUNTED NOT LESS THAN 6" AND NO MORE THAN 8" FROM FINISH FLOOR TO BOTTOM OF SIGN AND 4" FROM DOOR FRAME TO CLOSEST EDGE OF SIGN. PROVIDE LOW LEVEL EXIT SIGNS AS REQUIRED PER CODE.

21. ALL FIXTURES INDICATED WITH "COLOR AS SELECTED BY THE ARCHITECT" SHALL BE PROVIDED WITH CUSTOM COLORS PER THE ARCHITECT. SUBMIT SAMPLE COLOR CHIPS TO THE ARCHITECTS PRIOR TO ORDERING FIXTURES. TRIM RINGS FOR RECESSED DOWNLIGHTS SHALL BE COLOR AS SELECTED BY THE ARCHITECT. VERIFY COLOR SELECTION WITH THE ARCHITECT.

22. FOR OUTDOOR LIGHTING BRANCH CIRCUITS FROM BUILDING, INSTALL A RECESSED 4S, 2 1/8" (MIN) DEEP J-BOX WITH 2-GANG SWITCH RING GASKET WEATHERPROOF BLANK METAL COVER AT +12" TYPICAL.

23. POLE LIGHT AND POLE BASE COVER SHALL BE PRIMED WITH ONE COAT OF IRON OXIDE RUST - INHIBITIVE PRIME BASE COVER SHALL BE TWO PIECE HYDRO FORMED ALUMINUM BAKED POWDER URETHANE FINISHED COAT SELECT BY OWNER AND PAINTED BY MANUFACTURER. REFER TO STRUCTURAL DRAWINGS FOR CONCRETE BASE POLE DIMENSIONS.

24. EXTERIOR LIGHTING SHALL BE "DARK/NIGHT SKY" COMPLIANT AS DEFINED AND ADOPTED BY THE LOCAL AHJ. AT A MINIMUM, THE LIGHT SOURCE SHALL BE SHIELDED AND NOT DIRECTLY VISIBLE AS DETERMINED BY THE AHJ.

MECHANICAL SYSTEM

1. VERIFY EXACT LOCATIONS AND ORIENTATION OF ALL MECHANICAL EQUIPMENT WITH MECHANICAL DRAWINGS. FIELD VERIFY CONDITIONS WITH MECHANICAL CONTRACTOR PRIOR TO ROUGH-IN.

2. REFER TO THE MECHANICAL DRAWINGS FOR EXACT EQUIPMENT RATINGS AND ELECTRICAL REQUIREMENTS. COORDINATE WITH THE INSTALLER OF THE HVAC SYSTEMS AND PROVIDE ALL CONDUIT, WIRING, TIME CLOCKS, STARTERS, CONTROL DEVICES, RELAYS, DISCONNECT SWITCHES, FIRE SMOKE DAMPERS, ETC. FOR THE PROPER OPERATION OF THE MECHANICAL SYSTEMS. REFER TO THE MECHANICAL DRAWINGS AND ADDENDUMS FOR ADDITIONAL ELECTRICAL REQUIREMENTS.

3. INSTALL 8#14-CU CABLE FROM FAN COIL (FAU) TO HEAT PUMP (CONDENSING UNIT) AND INSTALL FUSIBLE DISCONNECT SWITCH NEMA -3R IN-LINE OF SIGHT OF EQUIPMENT. INSTALL FUSE(S) AS INDICATED ON NAME PLATE.

4. ALL EQUIPMENT, ENCLOSURES, DEVICES, DISCONNECT SWITCHES, CONNECTIONS, ETC. LOCATED ON THE ROOF SHALL BE WEATHERPROOF - NEMA 3R.

5. DISCONNECT SWITCHES SHALL BE HEAVY DUTY HORSEPOWER RATED. SIZE SWITCH AND FUSED PER THE NAMEPLATE VALUE ON THE MECHANICAL UNIT.

FIRE ALARM

1. ELECTRICAL CONTRACTOR SHALL COORDINATE WITH FIRE ALARM CONTRACTOR TO PROVIDE ALL BOXES, CONDUIT AND WIRING AS INDICATED ON THE APPROVED CONTRACTOR FIRE ALARM DRAWINGS.

2. THE REQUIRED SMOKE DETECTOR SHALL BE ON A PERMANENT WIRING WITHOUT ANY DISCONNECTING SWITCH - OTHER THAN THOSE FOR OVERCURRENT PROTECTION, INTERCONNECTED WITH ELECTRICAL CONTRACTOR SUPPLIED BATTERY BACK UP.

3. FIRE ALARM DRAWINGS, WHEN ATTACHED TO THIS PACKAGE, ARE FOR A REFERENCE ONLY. ELECTRICAL CONTRACTOR AND FIRE ALARM CONTRACTOR SHALL PREPARE FIRE ALARM DRAWINGS, LOCATING ALL DEVICES ROUTING OF CONDUIT INDICATING ALL WIRING. PREPARE VOLTAGE DROP AND BATTERY CALCULATIONS, ALL TO COMPLY WITH LOCAL FIRE DEPARTMENT REQUIREMENTS AND SUBMIT TO FIRE DEPARTMENT FOR APPROVAL. THE APPROVED DRAWINGS SHALL BE USED BY THE ELECTRICAL CONTRACTOR TO INSTALL ALL FIRE ALARM DEVICE BOXES, CONDUIT, ETC. AT NO ADDITIONAL COST TO OWNER.

4. SUBMIT A VARIANCE TO SEPARATE FIRE ALARM.

ADDITIONAL OTHER NOTES

1. ALL EQUIPMENT SHALL BE MOUNTED AND SUPPORTED ACCORDING TO THE OSHA REQUIREMENTS.

2. SWITCHGEAR IS BASED ON DIMENSIONAL INFORMATION PROVIDED BY EATON OR OTHER MANUFACTURER. IT IS THE RESPONSIBILITY OF THE CONTRACTOR TO VERIFY THAT THE SWITCHGEAR INTENDED FOR USE AT THIS FACILITY, FITS THE SPACES PROVIDED.

3. CONTRACTOR TO CONFIRM THE LOW VOLTAGE (<110v) CABLING REQUIREMENTS PRIOR TO BIDDING THE JOB. THE ELECTRICAL CONTRACTOR SHALL FURNISH AND INSTALL BELDEN CA. NO. 9248 RG6/U TYPE COAXIAL CABLE TRANSMISSION LINE (CONFIRM EXACT CABLE TYPE WITH COMMUNICATIONS VENDOR FOR THE PROJECT) WITH INDIVIDUAL HOMERUNS FROM COMMUNICATIONS MPOE ROOM TO CATV TERMINAL SERVICE BOX AT IDF ROOMS AND TO UNIT HSD BOX.

4. PROVIDE A MINIMUM OF A 4FT X 8FT X 3/4IN FIRE RATED PLYWOOD BACKBOARD IN EACH MPOE AND IDF ROOM, WITH A #6 COPPER (MIN) GROUND BONDED TO BUILDING GROUNDING SYSTEM. PROVIDE A DEDICATED QUAD PLEX RECEPTACLE PROTECTED BY A DEDICATED 20A/1P CIRCUIT IN THE MPOE AND EACH IDF ROOM. FOR THE CATV / PHONE PROVIDERS. FOR EXACT SIZE AND MORE DETAILS, REFER TO LOW VOLTAGE CONSULTANT.

5. CONTRACTOR TO VERIFY MIN. DIMENSIONS REQUIRED FOR EQUIPMENT SIZES & CLEARANCES IN THE ELECTRICAL ROOM WITH ACCOMMODATION FOR LOW VOLTAGE, GAS, ETC. WHEN APPLICABLE PRIOR TO PLACING THE ORDER FOR SUCH EQUIPMENT & REPORT ANY DISCREPANCY TO THE OWNER, ARCHITECT & ENGINEER. AN APPROVED EQUIPMENT SUBMITTAL IS NOT A CONTRACTOR VERIFICATION OF EQUIPMENT CLEARENCES AND DIMENSIONS AT THE ELECTRIC ROOM - AS REQUIRED ABOVE.

6. PENETRATIONS IN PARTY WALLS SHALL BE ACOUSTICALLY SEALED WITH "POLYCEL" AROUND NMC, CABLE, AND OTHER DEVICES SUCH AS RECEPTACLES, J-BOXES, ETC. ELECTRICAL DEVICES INSTALLED IN OPPOSITE FACES OF PARTY OR DIVISION WALL SHALL BE SEPARATED HORIZONTALLY NOT LESS THAN 24 INCHES. (IN DIFFERENT STUD BAYS FOR WOOD WALLS).

7. SEPARATE PERMITES ARE REQUIRED FOR THE SOLAR PHOTOVOLTAIC SYSTEM REQUIRED PER THE APPROVED ENER

LIGHTING

- LIGHT (SURFACE MOUNT)
- LIGHT (SURFACE MOUNT) WITH 90 MINUTES BATTERY PACK
- LIGHT (RECESS MOUNT)
- LIGHT (RECESS MOUNT) WITH 90 MINUTES BATTERY PACK
- LIGHT (WALL MOUNT)
- PENDANT LED LIGHT
- UNDER CABINET LINEAR LIGHT FIXTURE
- 1' X 4' LIGHT
- 1' X 4' LIGHT WITH 90 MINUTES BATTERY PACK
- TRACK LIGHT
- EMERGENCY LIGHT(BUG EYE)
- EXIT SIGN (CEILING MOUNTED)
- EXIT SIGN (WALL MOUNTED)

SITE LIGHTING

- POLE LIGHT
- POST LIGHT
- BOLLARD LIGHT
- UPLIGHT LIGHT
- TREE LIGHT

NOTE: VERIFY ALL LIGHT FIXTURES WITH OWNER/ ARCHITECT PRIOR TO BID. LIGHTS AND PANEL SHALL NOT BE RECESSED IN FIRE RATED ASSEMBLIES UNLESS BOXED WITH EQUIVALENT CONSTRUCTION.

SWITCH

- $ab — SINGLE POLE, ab = CONTROL ZONES a & b
- $3ab — 3-WAY
- $4ab — 4-WAY
- DIMMER SWITCH
- OCCUPANCY SENSOR(WALL)
- PUSH-BUTTON SWITCH
- DOOR BELL CHIME
- TELEPHONE OUTLET
- DATA OUTLET
- COMBINATION TELEPHONE AND DATA OUTLET BOX WALL
- TELEVISION OUTLET
- DAY LIGHT SENSOR(CEILING)
- OCCUPANCY SENSOR(CEILING)
- PP — POWER PACK

NOTE: LIGHT SWITCHES AND CONTROLS, WALL MOUNTED AT +48" AFF (MAX).
ALL WALL SWITCHES CONTROLLING EMERGENCY CIRCUITS SHALL BE ENGRAVED WITH "EMERGENCY" ON RED FACE PLATE

OUTLETS

- DUPLEX RECEPTACLE
- QUAD RECEPTACLE
- SPECIAL RECEPTACLE
- DUPLEX USB
- GFCI DUPLEX RECEPTACLE
- GFCI DUPLEX RECEPTACLE WITH WEATHERPROOF COVER
- DUPLEX RECEPTACLE, BOTTOM HALF SWITCHED
- DUPLEX CEILING RECEPTACLE
- DUPLEX FLOOR RECEPTACLE
- QUAD FLOOR RECEPTACLE
- DUPLEX ABOVE COUNTER
- GFCI DUPLEX ABOVE COUNTER
- CONTROLLER ABOVE COUNTER
- DUPLEX W/USB (TYP. ABOVE COUNTER)
- CONTROLLER W/USB (TYP. ABOVE COUNTER)

NOTE: ALL WALL MOUNTED RECEPTACLE SHALL BE +18" AFF U.O.N.
ALL WALL COUNTER MOUNTED RECEPTACLE SHALL BE GFCI AND 6" ABOVE SPLASH. COORDINATE WITH ARCHITECTURAL DRAWINGS.

MECHANICAL

- F — FUSED DISCONNECT SWITCH
- NON-FUSED DISCONNECT SWITCH
- T — THERMALLY RATED 2P MOTOR SWITCH
- M — MANUAL MOTOR RATED SWITCH
- CU X — CONDENSING UNIT (CU) OR HP X — HEAT PUMP (HP)
- FAU X — FORCED AIR UNIT (FAU) OR FC X — FAN COIL UNIT (FC)
- EF X — EXHAUST FAN (EF)
- SDD — SDD X — SMOKE DUCT DETECTOR (SDD)

NOTE: ALL A.I.C. RATINGS OF ELECTRICAL DISTRIBUTION EQUIPMENT SHALL BE VERIFIED WITH LOCAL UTILITY COMPANY HAVING JURISDICTION PRIOR TO BID.

MISC

- SD — SMOKE DETECTOR
- SD CO — SMOKE DETECTOR AND CARBON MONOXIDE COMBO
- 1 — KEYED NOTE SYMBOL
- LIGHT MARK
- PA — PANEL
- JUNCTION BOX (WALL MOUNTED)
- J — J-BOX (CEILING MOUNTED)

NOTE: ALL A.I.C.RATINGS OF ELECTRICAL DISTRIBUTION EQUIPMENT SHALL BE VERIFIED WITH LOCAL UTILITY COMPANY HAVING JURISDICTION PRIOR TO BID.

SINGLE LINE DIAGRAM

	CIRCUIT BREAKER
	DRAWOUT CIRCUIT BREAKER
	FUSED SWITCH
	TRANSFORMER
	AUTOMATIC TRANSFER SWITCH
G	GENERATOR
PANEL	PANELBOARD
M	METER
	MOTOR OR EQUIPMENT AS NOTED
	UNDERGROUND PULL SECTION LANDING LUGS
ST	SHUNT TRIP
LSIG	ELECTRONIC TRIP UNIT: L - LONG-TIME TRIP S - SHORT-TIME TRIP I - INSTANTANEOUS TRIP G - GROUND-FAULT TRIP. GROUND FAULT SENSING INTEGRAL WITH CIRCUIT BREAKER.
	FUSE CUTOUT
	DRY TYPE TRANSFORMER
	WYE CONFIGURATION
	DELTA CONFIGURATION
	GROUND
M KW	UTILITY COMPANY METER. PROVIDE CT'S & PT'S AS REQUIRED. REFER TO SINGLE LINE DIAGRAM.
	CURRENT TRANSFORMER
	DISCONNECT SWITCH FURNISHED W/ EQUIPMENT
	START-STOP CONTROL STATION
H O A	HAND-OFF AUTO CONTROL STATION
GF	GROUND FAULT RELAY
GFP	GROUND FAULT PROTECTION

ABBREVIATIONS

ABS	ABOVE BACKSPLASH	IG	ISOLATED GROUND	T	TRANSFORMER
ADA	AMERICAN WITH DISABILITY ACT	IN OR "	INCHES	TC	TIME CLOCK
AFF	ABOVE FINISHED FLOOR	INCAD	INCANDESCENT	TELC	TELEPHONE CABINET
AFG	ABOVE FINISHED GROUND			TEL	TELEPHONE
AFCI	ARC FAULT CIRCUIT INTERRUPTER	JBU/BOX	JUNCTION BOX	TELCOM	TELECOMMUNICATIONS
AIC	AMPERE INTERRUPTING CAPACITY			TELE/DATA	TELEPHONE & DATA
AF/AT	AMP FRAME, AMP TRIP	K	DEGREE KELVIN	TV	TELEVISION
ANN	FIRE ALARM ANNUNCIATOR PANEL	KVA	KILOVOLT AMPERES	TP	TAMPER PROOF
AS/AF	AMP SWITCH, AMP FUSE	KW	KILOWATT	TYP	TYPICAL
AMP, A	AMPERE	KCMIL	THOUSAND CIRCULAR MILS	TSP	TWISTED SHIELDED PAIR
ARCH	ARCHITECTURAL				
ASYM	ASYMMETRICAL	LC	LIGHTING CONTACTOR	UBP	UTILITY BRANCH PANEL
ATS	AUTOMATIC TRANSFER SWITCH	LCL	LINE CONTINUOUS LOAD	UG	UNDERGROUND
AV	AUDIO VISUAL	LCP	LIGHTING CONTROL PANEL	UGPS	UNDERGROUND PULL SECTION
AWG	AMERICAN WIRE GAUGE	LF	LINEAR FEET	UON	UNLESS OTHERWISE NOTED
		LPS	LOW PRESSURE SODIUM	UPS	UNINTERRUPTIBLE POWER SUPPLY
BATT	BATTERY	LT	LIGHTING TRANSFORMER	UT	UTILITY POWER TRANSFORMER
BC	BARE COPPER	LTG/LTS	LIGHTING	UTP	UNSHIELDED TWISTED PAIR
BCG	BARE COPPER GROUND	LSI	LONG TIME, SHORT TIME, INSTANTANOUS		
BKR	BREAKER	LSIG	LONG TIME, SHORT TIME, INSTANTANOUS, GROUND	V	VOLTS
BLDG	BUILDING			VA	VOLTS AMPERES
BOT	BOTTOM OF TRAY	M	METER	VD	VOLTAGE DROP
		MAX	MAXIMUM	VFD	VARIABILE FREQUENCY DRIVE
C	CONDUIT	MCA	MINIMUM CIRCUIT AMPACITY		
°C	CELSIUS	MCB	MAIN CIRCUIT BREAKER	W	WIRE
CAB	CABINET	MCC	MOTOR CONTROL CENTER	WP	WEATHERPROOF
CB	CIRCUIT BREAKER	MFR	MANUFACTURER		
CKT	CIRCUIT	MH	MOUNTING HEIGHT	XFMR	TRANSFORMER
CLCB	CURRENT LIMITING CIRCUIT BREAKER	MH	METAL HALIDE	XFR	TRANSFER
CLF	CURRENT LIMITING FUSE	MLO	MAIN LUGS ONLY		
CLG	CEILING	MOCP	MAXIMUM OVERCURRENT PROTECTION	Y	WYE CONNECTION
CM/GC	CONSTRUCTION MANAGER/GENERAL CONTRACTOR	M/TD	MOUNTED		
C.O.	CONDUIT ONLY, COMPLETE WITH PULL WIRE	MS	MAIN SWITCHBOARD		
COMM	COMMUNICATIONS	MV	MERCURY VAPOR		
CONN	CONNECTED	MW	MICROWAVE		
CONST	CONSTRUCTION				
CONT	CONTINUATION	N	NEUTRAL		
CPT	CONTROL POWER TRANSFORMER	NC	NORMALLY CLOSED		
CT	CURRENT TRANSFORMER	NEC	NATIONAL ELECTRICAL CODE		
CPT	CLEAN POWER TRANFORMER	NF	NON-FUSED		
		NIC	NOT IN CONTRACT		
Δ	DELTA CONNECTED	NL	NIGHT LIGHT		
DB	DISTRIBUTION BOARD	NO	NORMALLY OPEN		
DIA	DIAMETER	NO. OR #	NUMBER		
DISC SW	DISCONNECT SWITCH				
DIST	DISTRIBUTION	OFCI	OWNER FURNISHED, CONTRACTOR INSTALLED		
DEG	DEGREE				
DP	DISTRIBUTION PANELBOARD	P	POLE		
DT	DIRTY POWER TRANFORMER	PA	PUBLIC ADDRESS		
DWG	DRAWING	PB	PULL BOX		
DW	DISH WASHER	PC	PHOTOCELL		
		PH OR ϕ	PHASE		
EF	EXHAUST FAN	PL	POLE		
EG	EQUIPMENT GROUND	PR	PAIR		
(E)	EXISTING	PRI	PRIMARY		
EL	ELEVATION	PRIMARY	OVER 600 VOLTS		
ELEC	ELECTRICAL	PROVIDE	FURNISH, INSTALL, AND CONNECT		
ELEV	ELEVATOR	PT	POTENTIAL TRANSFORMER		
EMER	EMERGENCY	PWR	POWER		
EMS	ENERGY MANAGEMENT SYSTEM				
EMT	ELECTRICAL METALLIC TUBING	QTY	QUANTITY		
ENT	ELECTRICAL NON-METALLIC TUBING				
E.O.L	END-OF-LINE CIRCUIT TERMINATOR	RECPT. REC	RECEPTACLE		
EP	EXPLOSION PROOF	REF	REFRIGERATOR		
EQPT	EQUIPMENT	REQD	REQUIRED		
EWC	ELECTRIC WATER COOLER	RGS	RIGID GALVANIZED STEEL		
EXIST	EXISTING	RM	ROOM		
		RP	REC BUILDING PANEL		
FA	FIRE ALARM	ROIC	RESIDENT OFFICER IN CHARGE OF CONSTRUCTION		
FACP	FIRE ALARM CONTROL PANEL				
FATC	FIRE ALARM TERMINATION CABINET	SBG	STANDBY GENERATOR		
FDR	FEEDER	SDPB	STANDBY DISTRIBUTION PANELBOARD		
F/XT	FIXTURE	SEC	SECURITY		
FLA	FULL LOAD AMPS	SECONDARY	600 VOLTS AND LESS		
FLR	FLOOR	SECT	SECTION		
FLOUR	FLUORESCENT	SF/SQFT	SQUARE FOOT		
FT OR '	FEET	SN	SOLID NEUTRAL		
FP	FIRE PUMP	SPEC	SPECIFICATION		
		SP	SUMP PUMP		
G/GND	GROUND	SQ	SQUARE		
GEF	GARAGE EXHAUST FAN	SSG	SECONDARY SWITCHGEAR		
GFCI	GROUND FAULT CIRCUIT INTERRUPTER	ST	SHUNT TRIP		
GFP	GROUND FAULT PROTECTION	SURF	SURFACE		
		SW	SWITCH		
H	HOT (UNSWITCHED)	SYM	SYMMETRICAL		
HID	HIGH INTENSITY DISCHARGE	SYS	SYSTEMS		
HOA	HAND OFF AUTO				
HP	HORSE POWER				
HPS	HIGH PRESSURE SODIUM				
HTR	HEATER				
HVAC	HEATING, VENTILATION, & AIR CONDITIONING				
H.W.D.L	HEIGHT, WIDTH, DEPTH, LENGTH				

GOUVIS engineering consulting group, inc.

15 Studebaker
Irvine
CA 92618

Irvine
tel 949.752.1612
fax 949.752.5321

Palm Springs
tel 760.323.5090

REGISTERED PROFESSIONAL ENGINEER
MEHDI HOSSEINZADEH
E 22037
ELECTRICAL
STATE OF CALIFORNIA

DATE SIGNED: 3/24/21

RESTRICTIVE NOTICE

THESE DESIGNS, DRAWINGS, AND SPECIFICATIONS ARE THE EXCLUSIVE PROPERTY OF GOUVIS ENGINEERING CONSULTING GROUP. THEY ARE THE SUBJECTOF COPYRIGHT AND OTHER LEGAL PROTECTION. THEY MAY BE USED ONLY BY THEIR INTENDED RECIPIENT AND ONLY FOR THE PROJECT DEPCTED HEREIN. NO PART OF THESE DRAWINGS ARE TO BE COPIED, TRANSFERRED, REPRODUCED, NOR CAN THEY BE USED, IN WHOLE OR IN PART, BY ANY OTHER PERSON OR FOR ANY OTHER PROJECT OR STRUCTURE, WITHOUT THE PRIOR EXPRESS WRITTEN CONSENT OF GOUVIS ENGINEERING CONSULTING GROUP

© 2017 GOUVIS ENGINEERING CONSULTING GROUP INC. - ALL RIGHTS RESERVED

PROJECT:
BORSTEIN RESIDENCE

NOT FOR BID OR CONSTRUCTION

DEVELOPER:

ARCHITECT:
Architeyk

LOCATION:
188 Homewood Road
Los Angeles
CA, 90049

REVISIONS

NO.	DATE	DESCRIPTION

SHEET NAME:
ABBREVIATIONS & SYMBOL LIST

PROJECT NUMBER:
65671

ENGINEER:

DRAFTER:

SHEET NUMBER:
E-0.2

SYMBOLS LIST 2

ABBREVIATIONS 1

ISSUED DATE: 6/24/2020

NOTES:

1. THE ELECTRICAL CONTRACTOR SHALL VERIFY THE EXACT LOCATION OF ALL TELEVISION OUTLETS WITH THE ARCHITECT PRIOR TO INSTALLATION.
2. ALL DEVICES SHOWN ON THIS DETAIL ARE FOR REFERENCES OF MOUNTING HEIGHTS ONLY. THE ELECTRICAL CONTRACTOR SHALL FIELD ADJUST THE HEIGHTS OF THE DEVICES AS REQUIRED FOR PROPER MOUNTING OF THE DEVICES.
3. ALL DEVICES REQUIRED FOR THIS PROJECT MAY NOT APPEAR ON THIS DETAIL. ALL ITEMS SHOWN ON THIS DETAIL MAY NOT B REQUIRED OF THIS PROJECT.
4. FIRE ALARM HORN/STROBES ARE TO BE MOUNTED NO HIGHER THAN 96" AND NO LOWER THAN 80" ON CENTER.

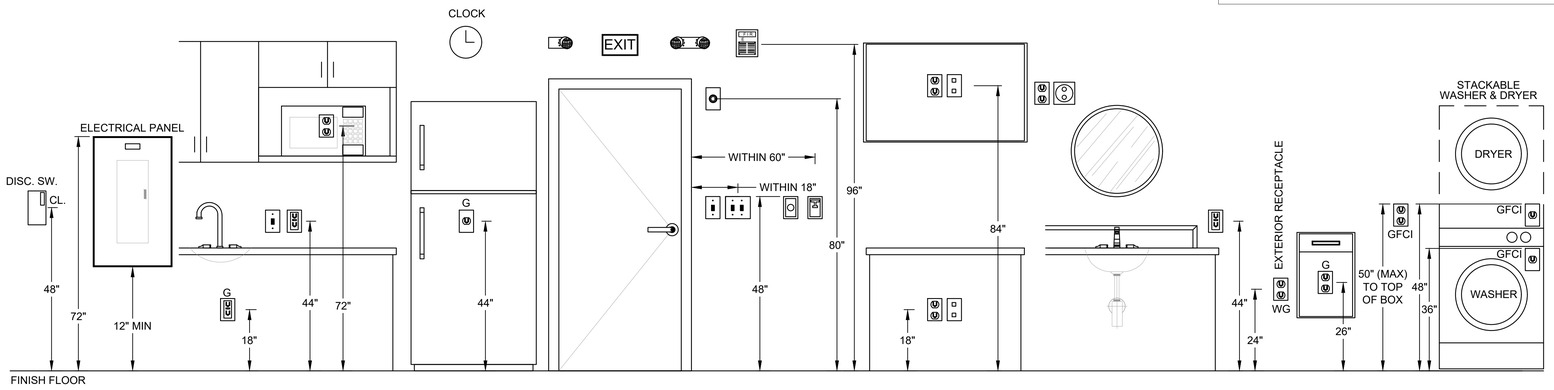

TYPICAL ELECTRICAL DEVICE HEIGHT 3

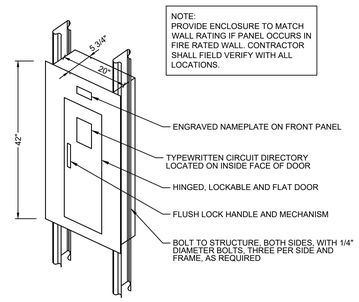

RECESSED MOUNTED PANEL 5

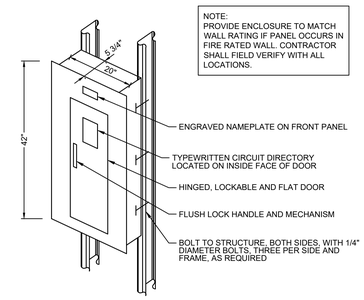

SURFACE MOUNTED PANEL 4

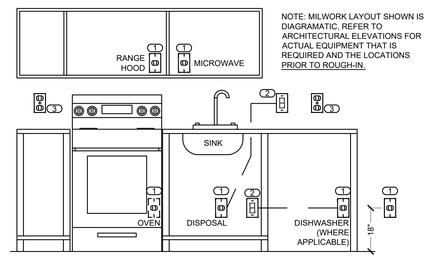

NOTE: MILWORK LAYOUT SHOWN IS DIAGRAMATIC, REFER TO ARCHITECTURAL ELEVATIONS FOR ACTUAL EQUIPMENT THAT IS REQUIRED AND THE LOCATIONS PRIOR TO ROUGH-IN.

KEYED NOTES:

1. DEDICATED SIMPLEX RECEPTACLE MOUNTED IN CASEWORK FOR LOAD INDICATED RELATIVE LOCATIONS ARE DIAGRAMATIC, REFER TO ARCHITECTURAL PLANS FOR ACTUAL LOCATIONS.
2. DISCONNECT SWITCH FOR SIMPLEX RECEPTACLE SERVING DISPOSALS AND DISHWASHER, LABEL SWITCHES: "DISPOSAL" AND "DISHWASHER DISCONNECT".
3. GFCI/AFCI RECEPTACLE ON EACH COUNTER AND ON EITHER SIDE OF SINK. PROVIDE A MINIMUM OF TWO DEDICATED COUNTERTOP RECEPTACLES, CIRCUIT ALL OTHER COUNTERTOP RECEPTACLES TOGETHER ON A COMMON CIRCUIT.

KITCHEN RECEPTACLE LAYOUT 2

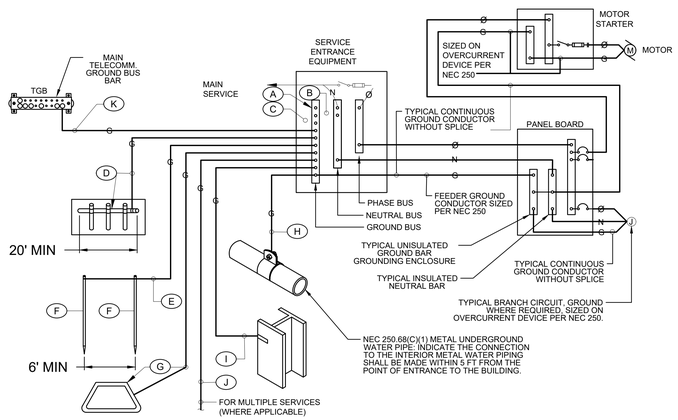

GROUNDING SCHEDULE

	A FACTORY INSTALLED GROUND BUS BAR	B INTEGRATED BUS BAR MAIN BOND JUMPER	C INTEGRATED BUS BAR CASE BOND JUMPER	D CONCRETE ENCASED ELECTRODE (UFER)	E GROUDING ELECTRODE CONDUCTOR TO ROD, PIPE OR PLATE	F CU or CU-CLAD STEEL GROUND ROD	G COPPER GROUND RING CONDUCTOR	H METALLIC PIPING BONDING CONDUCTOR	I BUILDING STEEL BONDING CONDUCTOR	J MULTIPLE SERVICE BONDING CONDUCTOR	K TELEPHONE SYSTEM BONDING CONDUCTOR
CODE REFERENCE / AMPACITY		N.E.C 250.102	N.E.C 250.102	N.E.C 250.50(c) 250.66(b)	N.E.C 260.66	N.E.C 250.52(a)(5)	N.E.C 250.50(d) 250.66(c)	N.E.C 250.50(a) 250.66	N.E.C 250.50(b) 250.66	N.E.C 250.66	
200 AMP AND LESS	SHALL BE SIZED TO ACCOMMODATE ALL GROUND WIRE LUGS AS INDICATED ON GROUNDING DIAGRAM AND/OR REFERENCED ELSEWHERE ON PLANS OR SPECIFICATIONS	#4	#4	#4	#4	3/4" x 10'	#2	#4	#4	#4	#6
225 AMP		#2	#2	#4	#2	3/4" x 10'	#2	#2	#2	#2	#6
400 AMP		#1/0	#1/0	#4	#1/0	3/4" x 10'	#1/0	#1/0	#1/0	#1/0	#6
600 AMP		#2/0	#2/0	#4	#3/0	3/4" x 10'	#2/0	#2/0	#2/0	#2/0	#6
800 AMP		#3/0	#3/0	#4	#3/0	3/4" x 10'	#3/0	#3/0	#3/0	#3/0	#6
1000 AMP		#3/0	#3/0	#4	#3/0	3/4" x 10'	#3/0	#3/0	#3/0	#3/0	#6
1200 AMP		250kcMIL	250kcMIL	#4	#3/0	3/4" x 10'	#3/0	#3/0	#3/0	#3/0	#6
1600 AMP		350kcMIL	350kcMIL	#4	#3/0	3/4" x 10'	#3/0	#3/0	#3/0	#3/0	#6
2000 AMP		400kcMIL	400kcMIL	#4	#3/0	3/4" x 10'	#3/0	#3/0	#3/0	#3/0	#6
2500 AMP		500kcMIL	500kcMIL	#4	#3/0	3/4" x 10'	#3/0	#3/0	#3/0	#3/0	#6
3000 AMP		500kcMIL	500kcMIL	#4	#3/0	3/4" x 10'	#3/0	#3/0	#3/0	#3/0	#6

GROUNDING SYSTEM GENERAL NOTES

1. THE GROUNDING ELECTRODE SYSTEM SHALL CONSIST OF ITEMS A, B, C, D, E, F AND G WHERE APPLICABLE.
2. ITEMS H, AND J MUST BE BONDED TOGETHER AND TO THE GROUNDING ELECTRODE SYSTEM WHEN THEY ARE PRESENT.
3. ITEM D CONCRETE ENCASED ELECTRODE (UFER) SHALL HAVE UFER SUPPORT CONSISTING OF 5/8 "x 10 'COPPER GROUND ROD CUT INTO2 SECTIONS AND DRIVEN FOR SUPPORT OF UFER CONDUCTOR ONLY COPPER TO COPPER CONNECTIONS ARE ACCEPTABLE. DO NOT USE RE - BAR FOR UFER SUPPORT (THIS IS TO AVOID THE HARMFUL EFFECTS OF DISSIMILAR METALS IN CONTACT.) A UL.LISTED COPPER TO RE - BAR CLAMP (SUCH AS GRAVES JONES BOND "SYSTEM) IS AN APPROVED ALTERNATIVE.
4. THIS DETAIL IS PROVIDE IN ACCORDANCE WITH THE NATIONAL ELECTRICAL CODE, ARTICLE 250, PERTAINING TO THE "GROUNDING ELECTRODE SYSTEM".
5. ALL SPLICING SHALL BE ACCOMPLISHED VIA EXOTHERMIC WELD (CAD - WELD) ONLY.
6. ALL CONDUCTOR SIZING INDICATED ON THE GROUNDING SCHEDULE ARE FOR COPPER CONDUCTORS, ALUMINUM IS NOT PERMITTED
7. ANY VARIANCES FROM THIS DIAGRAM AND ASSOCIATED SCHEDULE AND NOTES MUST BE REQUESTED AND APPROVED IN WRITING PRIOR TO INSTALLATION.
8. ALL INSTALLATIONS SHALL COMPLY WITH THE LATEST ADOPTED EDITION OF N.E.C. ARTICLE 250 (ALL SUBPARAGRAPHS) AND ALL STATE AND LOCAL REQUIREMENTS.
9. THE GROUNDING SYSTEM SHALL PROVIDE LESS COAL (4) FOUR OHMS RESISTANCE TO GROUND AT THE SERVICE CONNECTION. THE RESULTS SHALL BE VERIFIED BY AN INDEPENDENT TESTING AGENCY VIA GROUND TEXT (FALL OF POTENTIAL) AND SUBMITTED TO. ELECTRICAL ENGINEER UPON COMPLETION OF PROJECT

TYPICAL SYSTEM GROUNDING AND BONDING 1

ISSUED DATE: 8/24/2020

GOUVIS engineering consulting group, inc.

15 Studebaker
Irvine
CA 92618

Irvine
tel 949.752.1612
fax 949.752.5321

Palm Springs
tel 760.323.5090

REGISTERED PROFESSIONAL ENGINEER
HEIDI HOBBENS-GOUVIS
E 22037
ELECTRICAL
STATE OF CALIFORNIA

DATE SIGNED: 3/24/21

RESTRICTIVE NOTICE

THESE DESIGNS, DRAWINGS, AND SPECIFICATIONS ARE THE EXCLUSIVE PROPERTY OF GOUVIS ENGINEERING CONSULTING GROUP. THEY ARE THE SUBJECTOF COPYRIGHT AND OTHER LEGAL PROTECTION. THEY MAY BE USED ONLY BY THEIR INTENDED RECIPIENT AND ONLY FOR THE PROJECT DEPICTED HEREIN. NO PART OF THESE DRAWINGS ARE TO BE COPIED, TRANSFERRED, REPRODUCED, NOR CAN THEY BE USED, IN WHOLE OR IN PART, BY ANY OTHER PERSON OR FOR ANY OTHER PROJECT OR STRUCTURE, WITHOUT THE PRIOR EXPRESS WRITTEN CONSENT OF GOUVIS ENGINEERING CONSULTING GROUP

© 2017 GOUVIS ENGINEERING CONSULTING GROUP INC. - ALL RIGHTS RESERVED

PROJECT:
BORSTEIN RESIDENCE

NOT FOR BID OR CONSTRUCTION

DEVELOPER:

ARCHITECT:
Architeyk

LOCATION:
188 Homewood Road
Los Angeles
CA, 90049

REVISIONS

NO.	DATE	DESCRIPTION

SHEET NAME:
DETAILS

PROJECT NUMBER:
65671

ENGINEER:

DRAFTER:

SHEET NUMBER:
E-0.3

SINGLE-LINE DIAGRAM KEYED NOTES

1. VERIFY WITH SERVICE PLANNER FOR AIC RATING AND ELECTRICAL INFORMATION BEFORE ISSUING ANY BID. NOTIFY ENGINEER IMMEDIATELY IF MAJOR DISCREPANCIES OCCURS.

SINGLE-LINE DIAGRAM GENERAL NOTES

1. THE MAXIMUM AVAILABLE FAULT CURRENT IS BASED ON WORST CASE FAULT CURRENT PUBLISHED BY THE UTILITY COMPANY. CONTRACTOR TO OBTAIN FAULT CURRENT LETTER FROM UTILITY COMPANY FOR EACH SERVICE BEFORE ORDERING SWITCHBOARD. IF AVAILABLE FAULT CURRENT IS HIGHER THAN SHOWN IN THE DRAWINGS, CONTACT ELECTRICAL ENGINEER IMMEDIATELY.
2. STUB 1" FUTURE PV CONDUIT FOR SOLAR. COORDINATE WITH SOLAR CONSULTANT FOR ALL ELECTRICAL REQUIREMENTS.
3. LETTER FOR SHORT CIRCUIT CURRENT VALUE FROM UTILITY COMPANY SHALL BE AVAILABLE AT THE JOB SITE FOR INSPECTION.
4. ELECTRICAL EQUIPMENT SHALL BE LISTED BY THE CITY, WHERE THE PROJECT IS LOCATED, RECOGNIZED ELECTRICAL TESTING LABORATORY OR APPROVED BY THE DEPARTMENT.
5. ALL NEW CIRCUIT BREAKERS, FUSIBLE SWITCHES AND ELECTRICAL EQUIPMENT SHALL BE FULLY RATED HAVING A SHORT-CIRCUIT (AIC) RATING EXCEEDING THE AVAILABLE SHORT-CIRCUIT CURRENT AT THE EQUIPMENT. SERIES RATING OF EQUIPMENT IS NOT ALLOWED.
6. ALL SWITCHBOARDS AND DISTRIBUTION BOARDS SHALL HAVE:
   - 6.1. TIN-PLATED ALUMINUM BUSSING WITH RECTANGULAR CROSS SECTION. HORIZONTAL AND VERTICAL BUSSING SHALL BE FULL LENGTH AND SHALL HAVE PROVISIONS FOR FUTURE EXTENSIONS. ALL BUSSING SHALL HAVE MINIMUM WITHSTAND RATING EQUAL TO THE AVAILABLE FAULT CURRENT INDICATED. ALL VERTICAL AND HORIZONTAL BUSSING SHALL BE RATED AT FULL CAPACITY IN ALL SWITCHBOARD AND DISTRIBUTION BOARD SECTIONS. PROVIDE 100% NEUTRAL BUSSING MINIMUM UNLESS OTHERWISE NOTED. PROVIDE FULL LENGTH GROUND BUS AND, WHERE INDICATED ON PLANS, ISOLATED GROUND BUSSING. PROVIDE REAR WIRE WAY IN ALL SWITCHBOARD SECTIONS.
   - 6.2. LUGS SUITABLE FOR USE WITH COPPER OR ALUMINUM CONDUCTORS LISTED FOR USE WITH 75 DEGREE CELSIUS AMPACITY CONDUCTORS.
   - 6.3. PERMANENT PLACARD(S) MARKED PER THE SPECIFICATIONS AND PER NEC (OR CEC-WHERE ADOPTED) SECTIONS 225.37, 230.2(E), 690.56, 692.56, 700.7, 701.7, 702.7, AND 705.10 DENOTING THE PRESENCE OF ADDITIONAL SERVICES, PHOTOVOLTAIC SYSTEMS, FUEL CELLS, EMERGENCY OR STAND-BY POWER SOURCES AS APPLICABLE.
   - 6.4. SINGLE LINE DIAGRAM SHOWN IS A "FULLY RATED SYSTEM" UNLESS NOTED. OTHERWISE.
   - 6.5. THE MAXIMUM COMBINED VOLTAGE DROP ON BOTH INSTALLED FEEDER CONDUCTORS AND BRANCH CONDUCTORS TO THE FARTHEST CONNECTED LOAD OR OUTLET SHALL NOT EXCEED 5 PERCENT.
   - 6.6. ALL ELECTRICAL EQUIPMENT SHALL BE LABELED, LISTED, OR CERTIFIED BY A NATIONALLY RECOGNIZED TESTING LABORATORY ACCREDITED BY THE "UNITED STATES OCCUPATIONAL SAFETY HEALTH ADMINISTRATION".

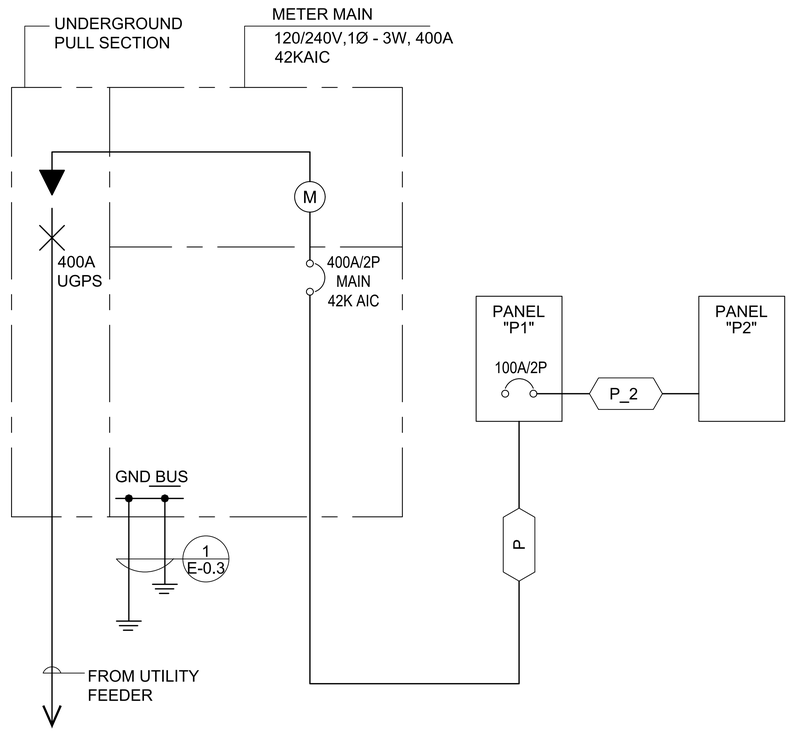

Voltage Drop and Short Circuit Calculation

					FEEDER					CONDUIT							FAULT CURRENT			
CABLE NAME	PANEL NAME	UNIT/ CIRCUIT	VOLTS	PHASE	DEMAND AMPS	AMPS	PARALLEL RUNS	PHASE CONDUCTOR	EQUIPMENT GROUNDING CONDUCTOR	CONDUCTOR MATERIAL	CONDUCTOR INSULATION	CONDUIT TYPE	CONDUIT SIZE	FILL% (<40%)	DISTANCE (FT) "L"	%VD	FAULT CURRENT	Isc	AIC
P	P1		240	1	400	400	2	4/0	1	ALUM	THHN	EMT	2	33.59%	5	0.09	42000	38836	42000
P_2	P2		240	1	15	100	1	2	6	ALUM	THHN	EMT	1 1/4	26.61%	5	0.02	38836	27048	42000

SINGLE LINE DIAGRAM | 3

MECHANICAL & PLUMPING EQUIPMENT SCHEDULE GENERAL NOTES:

A. FUSED AS RECOMMENDED BY MANUFACTURER.

B. REFER TO MECHANICAL & PLUMBING DRAWING FOR MORE INFORMATION ABOUT MECHANICAL & PLUMPING EQUIPMENTS.

MECHANICAL EQUIPMENT SCHEDULE

ITEM	DESCRIPTION	EQUIPMENT RATING					FUSED DISCONNECT	CIRCUIT DATA CONDUIT - WIRE
				MOTOR				
		VOLTS	HP	FLA	MCA	MOCP		
CU 61	CONDENSER UNIT	240	-	25.92	32.4	50	60AS-2P-50AF	P1-25,27 1"C-2#6, 1#8E.G.
FAU 61	FORCED AIR UNITS	120	-	13.36	16.7	15	$^{M}_{2}$	P1-28 3/4"C-2#12, 1#12E.G.
EF R	EXHAUST FAN	120	14.5 W	-	-	-	$^{M}	PX-XX 3/4"C-2#12, 1#12E.G.
EF B	EXHAUST FAN	120	37.0 W	-	-	-	$^{M}	PX-XX 3/4"C-2#12, 1#12E.G.
EF MB	EXHAUST FAN	120	37.0 W	-	-	-	$^{M}	PX-XX 3/4"C-2#12, 1#12E.G.
EF L	EXHAUST FAN	120	37.0 W	-	-	-	$^{M}	PX-XX 3/4"C-2#12, 1#12E.G.
FA 1	EXHAUST FAN	120	110 W	-	-	-	$^{M}	PX-XX 3/4"C-2#12, 1#12E.G.
PLUMPING EQUIPMENT SCHEDULE								
CP 1	CIRCULATION PUMP	120	180 W	-	-	-	-	P1-31 3/4"C-2#12, 1#12E.G.
TWH 1	TANKLESS WATER HEATER	120	180 W	-	-	-	-	P1-29 3/4"C-2#12, 1#12E.G.

NOTE :
1. FUSED/FUSED SIZE PER MANUFACTURER'S RECOMMENDATION. ELECTRICAL CONTRACTOR SHALL VERIFY PRIOR TO ROUGH-IN.
2. PROVIDE (1) 3/4" C.O. WITH PULL WIRE FROM EQUIPMENT LOCATION TO RESPECTIVE EQUIPMENT CONTROL DEVICE FOR CONTROL WIRING AS REQUIRED. REFER TO MECHANICAL FOR EXACT CONTROL LOCATION AND ADDITIONAL REQUIREMENTS PRIOR TO ROUGH-IN.

EQUIPMENT SCHEDULES | 2

UNIT SERVICE LOAD CALCULATION

NEC	LOAD GROUP	PLAN 1
	Area SQ. FT.	8484
	GENERAL LIGHTING	
220.82(B)(1)	3X Area	25452
220.82(B)(2)	Small Appliance	9000
	Laundry Load (Washer & Dryer)	3000
	General Lighting Subtotal	37452
220.82(B)(3)a	OTHER FIXED APPLIANCES	
	Garbage Disposer	1200
	Dishwasher	3600
	Garage Door Opener	2400
	Under Ref.	2500
	Ice Maker	500
	Microwave Oven	5400
	Warming Drawer	500
	Total Fixed Appliance	16100
220.82(B)(3)b	COOKING LOAD	
	Range	8000
	Total Cooking Load	8000
220.82(B)(3)d	WATER HEATERS	
	Gas Water Heater (Tankless)	360
	TOTAL GENERAL LOAD	61912
	First 10KVA at 100%	10000
	Remainder at 40%	20764.8
	Subtotal General Load	30764.8
220.82(C)	HEATING AND AIR-CONDITIONING LOAD	
	Total CU/HP Load	6222
	Fancoil Unit/Air Handling Unit	1713
	Total	7935
	OTHER LOADS	
	ADF	180
	EV Charger	9600
	Elevator	7200
	Sump Pump	2000
	Central Vaccum	700
	Total Other Load	19680
	CALCULATED LOAD WITH DEMAND FACTOR	58379.8
	AMPS CALCULATIONS	
	Volt	240
	Phase	1
	Amps	244

LOAD CALCULATIONS | 1

GOUVIS engineering consulting group, inc.®

15 Studebaker
Irvine
CA 92618

Irvine
tel 949.752.1612
fax 949.752.5321

Palm Springs
tel 760.323.5090

REGISTERED PROFESSIONAL ENGINEER NEERU HOSSENLOPP E 22037 ELECTRICAL STATE OF CALIFORNIA

DATE SIGNED: 3/24/21

RESTRICTIVE NOTICE

THESE DESIGNS, DRAWINGS, AND SPECIFICATIONS ARE THE EXCLUSIVE PROPERTY OF GOUVIS ENGINEERING CONSULTING GROUP. THEY ARE THE SUBJECTOF COPYRIGHT AND OTHER LEGAL PROTECTION. THEY MAY BE USED ONLY BY THEIR INTENDED RECIPIENT AND ONLY FOR THE PROJECT DEPCTED HEREIN. NO PART OF THESE DRAWINGS ARE TO BE COPIED, TRANSFERRED, REPRODUCED, NOR CAN THEY BE USED, IN WHOLE OR IN PART, BY ANY OTHER PERSON OR FOR ANY OTHER PROJECT OR STRUCTURE, WITHOUT THE PRIOR EXPRESS WRITTEN CONSENT OF GOUVIS ENGINEERING CONSULTING GROUP

© 2017 GOUVIS ENGINEERING CONSULTING GROUP INC. - ALL RIGHTS RESERVED

PROJECT:
BORSTEIN RESIDENCE

NOT FOR BID OR CONSTRUCTION

DEVELOPER:

ARCHITECT:
Architeyk

LOCATION:
188 Homewood Road
Los Angeles
CA, 90049

REVISIONS

NO.	DATE	DESCRIPTION

SHEET NAME:
LOAD CALCULATIONS, SINGLE LINE DIAGRAM, PANEL SCHEDULES & EQUIPMENT SCHEDULES

PROJECT NUMBER:
65671

ENGINEER:

DRAFTER:

SHEET NUMBER:
E-0.4

ISSUED DATE: 9/24/2020

PANEL "P1"

MOUNTING	RECESSED	DOUBLE LUG	NO	VOLTS	120/240	MAIN	MLO
NEMA 3R	NO	200% NEUTRAL	NO	PHASE	1	BUS	400
FEED THRU	NO	I/G BUS	NO	WIRE	3	A.I.C.	42000

Wire Size	CIRC	LOCATION	A	B	LTG	CONV	KIT	RECP	MISC	BKR	NOTES		NOTES	BKR	MISC	RECP	KIT	CONV	LTG	A	B	LOCATION	CIRC	W Si
#12CU	1	GENERAL LTG 1	1280							20/1	A		A	20/1						1440		GENERAL LTG 3	2	#12
#12CU	3	GENERAL LTG 2		1260						20/1	A		A	20/1							1080	GENERAL LTG 4	4	#12
#12CU	5	GENERAL LTG 5	1080							20/1	A		A	20/1						1260		GENERAL LTG 6	6	#12
#12CU	7	GENERAL LTG 7		1080						20/1	A		A	20/1							1260	GENERAL LTG 8	8	#12
#12CU	9	GENERAL LTG 9	1260							20/1	A		A	20/1						0		GENERAL LTG 10	10	
#12CU	11	MASTER BED REC.		1800						20/1	A		A	20/1							1080	GENERAL LTG 11	12	#12
#12CU	13	SMALL APPLIANCE	1500							20/1	DF		A	20/1						1440		GENERAL LTG 12	14	#12
#12CU	15	SMALL APPLIANCES		1500						20/1	DF		G	20/1							1200	GARAGE DOOR 1	16	#12
#12CU	17	SMALL APPLIANCES	1500							20/1	DF		G	20/1						1200		GARAGE DOOR 2	18	#12
#12CU	19	SMALL APPLIANCES		1500						20/1	DF		G	20/1							1080	GARAGE REC.	20	#12
#12CU	21	SMALL APPLIANCES	1500							20/1	DF		DF	20/1						1500		WASHER	22	#12
#12CU	23	SMALL APPLIANCES		1500						20/1	DF		DF	20/1							1500	DRYER	24	#12
#12CU	25	DISHWASHER 1	1200							20/1	DF		DF	20/1						1200		DISHWASHER 2	26	#12
#12CU	27	GARBAGE DISPOSAL		1200						20/1	DF		DF	40/2							2700	MICROWAVE	28	#8
#12CU	29	DISHWASHER 3	1200							20/1	DF			--						2700		--	30	
#12CU	31	WARMING DRAWER		500						20/1	DF		A	20/1							500	UNDERCOUNTER REF. 2	32	#12
#12CU	33	UNDERCOUNTER REF.	1000							20/1	A		DF	50/2						4000		RANGE	34	#6
#12CU	35	UNDERCOUNTER REF.		1000						20/1	A			--							4000	--	36	
#8CU	37	ELEVATOR	3600							40/2			A	20/1						720		GENERAL LTG 13	38	#12
	39	--		3600						--				20/1							0	SPARE	40	
#12CU	41	TANKLESS WATER HEATER	180							20/1				20/1						0		SPARE	42	
#12CU	43	TANKLESS WATER HEATER		180						20/1				20/1							0	SPARE	44	
#12CU	45	VACUUM	700							20/1				20/1						0		SPARE	46	
	47	SPARE		0						20/1				20/1							0	SPARE	48	
	49	SPARE	0							20/1				20/1						0		SPARE	50	
#8CU	51	EV CAPABLE		3840						40/2				20/1							0	SPARE	52	
	53	--	3840							--				20/1						0		SPARE	54	

	A =	35300					B =	33360	
	W/LCL A =	35300					W/LCL B =	33360	
TOTAL VA =	68660	W/ LCL =	68660	W/ LCL AMPS =	287	TOTAL LCL =	0	x 0.25 =	0
HIGH PHASE VA =	35300	W/ LCL =	35300	HIGH PH AMPS =	294	HIGH PHASE LCL =	0	x 0.25 =	0

REFER TO RESPECTIVE DWELLING UNIT LOAD CALCULATIONS FOR FEEDER/PANEL LOAD JUSTIFICATION

PANEL NOTES

"A"	AFCI PROTECTION TYPE CIRCUIT BREAKER
"G"	GFCI PROTECTION TYPE CIRCUIT BREAKER
"B"	BACKFEED TYPE CIRCUIT BREAKE
"DF"	DUAL-FUNCTION AFCI/GFCI PROTECTION TYPE CIRCUIT BREAKER
"P"	SPACE PROVISION ONLY. NO BREAKER REQUIRED.
"PV"	SOLAR READY BY OTHERS

GOUVIS engineering consulting group, inc.

15 Studebaker
Irvine
CA 92618

Irvine
tel 949.752.1612
fax 949.752.5321

Palm Springs
tel 760.323.5090

REGISTERED PROFESSIONAL ENGINEER
BEHZAD HOSSEINZADEGAN
E 22037
ELECTRICAL
STATE OF CALIFORNIA

DATE SIGNED: 3/24/21

RESTRICTIVE NOTICE

THESE DESIGNS, DRAWINGS, AND SPECIFICATIONS ARE THE EXCLUSIVE PROPERTY OF GOUVIS ENGINEERING CONSULTING GROUP. THEY ARE THE SUBJECTOF COPYRIGHT AND OTHER LEGAL PROTECTION. THEY MAY BE USED ONLY BY THEIR INTENDED RECIPIENT AND ONLY FOR THE PROJECT DEPCTED HEREIN. NO PART OF THESE DRAWINGS ARE TO BE COPIED, TRANSFERRED, REPRODUCED, NOR CAN THEY BE USED, IN WHOLE OR IN PART, BY ANY OTHER PERSON OR FOR ANY OTHER PROJECT OR STRUCTURE, WITHOUT THE PRIOR EXPRESS WRITTEN CONSENT OF GOUVIS ENGINEERING CONSULTING GROUP

© 2017 GOUVIS ENGINEERING CONSULTING GROUP INC. - ALL RIGHTS RESERVED

PROJECT:
BORSTEIN RESIDENCE

NOT FOR BID OR CONSTRUCTION

DEVELOPER:

ARCHITECT:
Architeyk

LOCATION:
188 Homewood Road
Los Angeles
CA, 90049

REVISIONS

NO.	DATE	DESCRIPTION

SHEET NAME:
LOAD CALCULATIONS, SINGLE LINE DIAGRAM, PANEL SCHEDULES & EQUIPMENT SCHEDULES

PROJECT NUMBER:
65671

ENGINEER:

DRAFTER:

SHEET NUMBER:
E-0.5

ISSUED DATE 8/24/2020

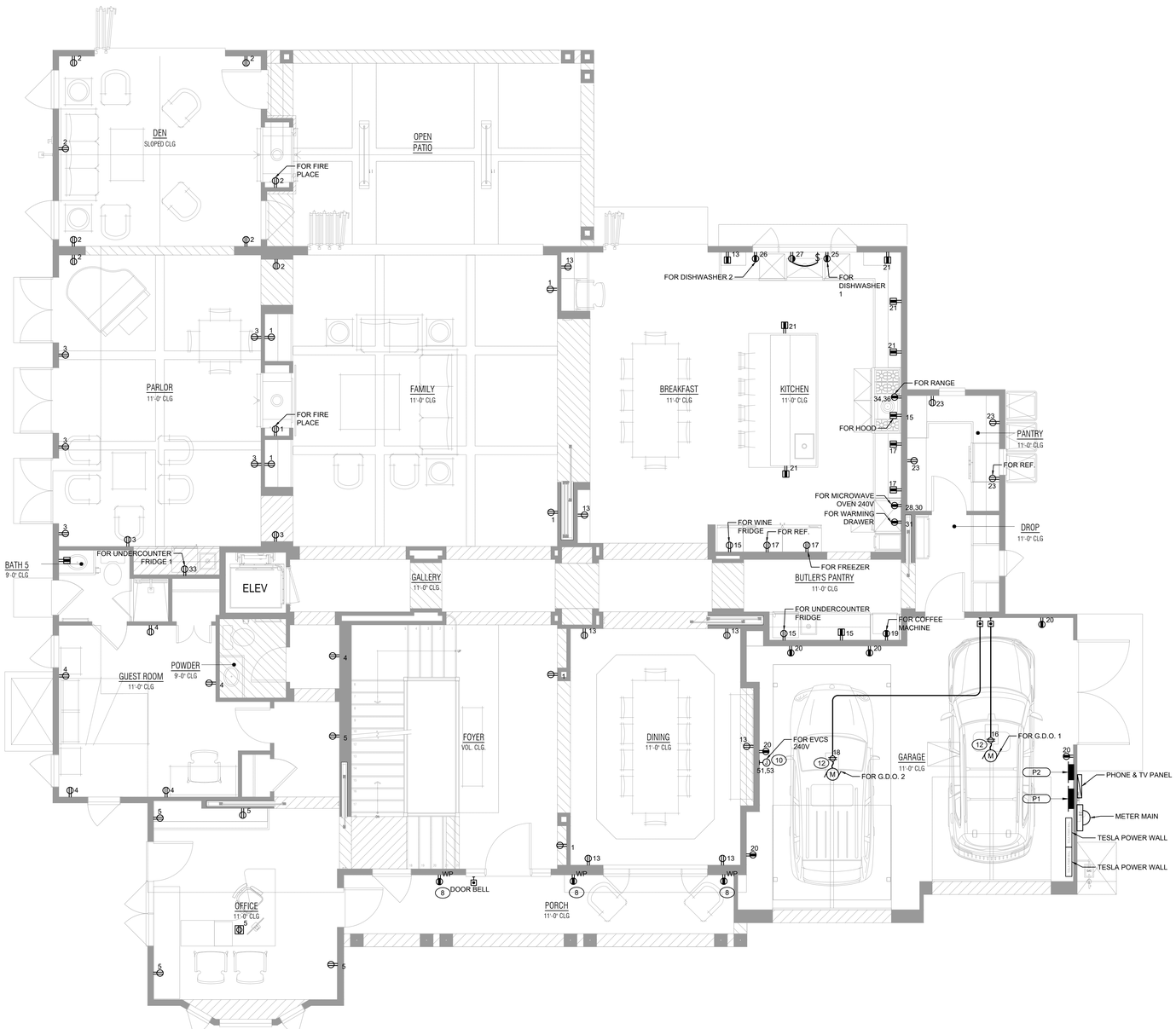

SMOKE DETECTORS NOTES

1. SMOKE ALARMS AND SMOKE DETECTORS SHALL NOT BE LOCATED WHERE AMBIENT CONDITION, INCLUDING HUMIDITY AND TEMPERATURE, ARE OUTSIDE THE LIMITS SPECIFIED BY THE MANUFACTURER'S PUBLISHED INSTRUCTIONS.
2. SMOKE ALARMS OR SMOKE DETECTORS SHALL BE INSTALLED A MINIMUM OF 20 FOOT HORIZONTAL DISTANCE FROM A PERMANENTLY INSTALLED COOKING APPLIANCE, EXCEPTION IONIZATION SMOKE ALARMS OR PHOTOELECTRIC SMOKE ALARMS PER CODE.
3. INSTALLATION NEAR BATHROOMS. SMOKE ALARMS SHALL BE INSTALLED NOT LESS THAN A 3 FOOT HORIZONTAL DISTANCE FROM THE DOOR OR OPENING OF A BATHROOM THAT CONTAINS A BATHTUB OR SHOWER UNLESS THIS WOULD PREVENT PLACEMENT OF A SMOKE ALARM REQUIRED BY OTHER SECTION OF THE CODE.
4. SMOKE ALARMS AND SMOKE DETECTORS SHALL NOT BE INSTALLED WITH A 36 INCH HORIZONTAL PATH FROM THE SUPPLY REGISTERS OF A FORCED AIR HEATING OR COOLING SYSTEM AND SHLLE BE INSTALLED OUTSIDE OF THE DIRECT AIR FLOW FROM THOSE REGISTERS.
5. CARBON MONOXIDE/ SMOKE DETECTORS SHALL BE PERMANENTLY WIRED AND PROVIDED WITH BATTERY BACK-UP. SMOKE DETECTORS ARE TO BE INTERCONNECTED WITH-IN EACH UNIT SO THAT ALL DETECTORS WITH-IN THE UNIT WILL SOUND THEIR ALARMS ON ACTIVATION OF ANY DETECTOR IN THE UNIT.
6. WHERE THE HIGHEST POINT OF A CEILING IN A ROOM THAT OPENS TO THE HALLWAY SERVING THE BEDROOMS EXCEEDS THAT OF THE OPENING INTO THE HALLWAY BE 24 INCHES OR MORE, SMOKE DETECTORS SHALL BE INSTALLED IN THE HALLWAY AND IN THE ADJACENT ROOM WITHIN 12 INCHES FROM THE HIGHEST POINT OF THE CEILING.
7. CARBON MONOXIDE/ SMOKE DETECTORS INTERCONNECTED SHALL BE INSTALLED WITHIN EACH DWELLING UNIT BEFORE APPROVAL BY THE FIRE DEPARTMENT.

GENERAL NOTES

1. PROVIDE VACANCY SENSOR/DIMMER TO ALL LUMINAIRES REQUIRED BY SECTION 150.0 OF 2019 TITLE 24 PART 6.
2. THIS DRAWING IS FOR REFERENCE ONLY. WIRE CKT 20 ON THE PLAN TO ALL DETECTORS FOR A COMPLETE AND OPERATIONAL SYSTEM. VERIFY W/LOCAL JURISDICTION FOR ALARM DETECTOR REQUIREMENT BEFORE ROUGH-IN.
3. IN DWELLING AREA SPECIFIED IN CEC 2019 SECTION 210.52; (A) WALL SPACE, (B) SMALL-APPLIANCE CIRCUIT, (C) COUNTERTOP SPACE, (D) BATHROOM AREA, (E) OUTDOORS, (F) LAUNDRY AREA, (G) GARAGE, AND (H) HALLWAYS; ALL 125-VOLT, 15- AND 20- AMPERE RECEPTACLES SHALL BE LISTED TAMPER-RESISTANT RECEPTACLES.
4. OUTLETS INSTALLED IN KITCHENS, FAMILY ROOMS, LIVING ROOMS, PARLORS, LIBRARIES, DENS, BEDROOMS, SUNROOMS, RECREATION ROOMS, CLOSETS, HALLWAYS, LAUNDRY AREAS OR SIMILAR ROOMS OR AREAS WILL BE PROTECTED BY A LISTED ARC-FAULT CIRCUIT INTERRUPTER, COMBINATION-TYPE, INSTALLED TO PROVIDE PROTECTION OF THE BRANCH CIRCUIT.
5. ALL NEW CARBON MONOXIDE ALARM ARE 120V HARD-WIRED WITH BATTERY BACKUP, INTERCONNECTED WITH OC SENSOR, AND ARE AUDIBLE IN ALL SLEEPING ROOMS.
6. ELECTRICAL CONTRACTOR MUST VERIFY MECHANICAL EQUIPMENT INFORMATION FOR MECHANICAL DRAWING BEFORE ISSUING ANY BID. NOTIFY ENGINEER IMMEDIATELY IF ANY DISCREPANCY OCCUR.
7. THE HEIGHT OF THE OUTLETS AND SWITCHES ARE NOT NOTED ON THE LEGEND OR IN THE UNIT PLANS. REFER TO "TYPICAL ELECTRICAL DEVICE HEIGHT ON E-0.3"
8. ALL DWELLING UNIT LUMINAIRES SHALL BE HIGH EFFICACY IN ACCORDANCE WITH TABLE 150.0 OF 2019 BUILDING ENERGY EFFICIENCY STANDARDS, TITLE 24 PART 6.
9. ELECTRICAL VEHICLE SUPPLY EQUIPMENT (EVSE) IS REQUIRED IN NEW ONE- AND TWO-FAMILY DWELLINGS AND TOWNHOMES WITH ATTACHED GARAGES.
10. NEW GARAGES SHALL HAVE BATTERY BACK-UP INSTALLED FOR ANY GARAGE DOOR OPENERS. SB969.
12. PROVIDE A MINIMUM OF TWO 20-AMP SMALL APPLIANCE BRANCH CIRCUITS. THESE CIRCUITS SHALL SERVE ALL OUTLETS IN THE KITCHEN, PANTRY, BREAKFAST ROOM, DINING ROOM OR SIMILAR AREA OF THE DWELLING. THESE CIRCUIT SHALL HAVE NO OTHER OUTLETS EXCEPT IN THE PANTRY, BREAKFAST ROOM, DINING ROOM OR SIMILAR AREA OF THE DWELLING. THIS CIRCUIT MAY SERVE A WALL SWITCH CONTROLLED RECEPTACLE PROVIDED IN LIEU OF LIGHTING OUTLET.
13. PROVIDE A MINIMUM 20-AMP CIRCUIT FOR EACH OF THE FOLLOWING FASTENED IN PLACE APPLIANCES, DISHWASHER, TRASH COMPACTOR AND MICROWAVE OVEN.
14. PROVIDE A MINIMUM 15-AMP REFRIDGERATION EQUIPMENT BRANCH CIRCUIT. THIS CIRCUIT SHALL HAVE NO OTHER OUTLETS.
15. PROVIE A 20-AMP LAUNDRY BRANCH CIRCUIT. THIS CIRCUIT MAY SERVCE ONE ADDITIONAL OUTLET IN THE LAUNDRY AREA.
16. PROVIDE A MINIMUM 20-AMP BATHROOM BRANCH CIRCUIT. THIS CIRCUIT MAY SERVE MORE THAN ONE BATHROOM, HOWEVER MAY NOT HAVE OTHER OUTLETS.
17. THE MAXIMUM NUMBER OF OUTLETS ON A 15-AMPERE, 125-VOLT LUMINAIRE CIRCUIT SHALL BE TWELVE (12) AND SHALL NOT CONTAIN GENERAL-PURPOSE OUTLETS. SMOKE DETECTOR OUTLETS NEED NOT BE COUNTED. IC RATED RECESSED LUMINAIRES AND LOW WATTAGE ENERGY EFFICIENT LUMINAIRES MAY USE ARTICLE 220.14(D) FOR COMPUTING MAXIMUM NUMBER OF LUMINAIRES.
18. ALL LUMINAIRES (FIXTURE) INSTALLED IN DAMP LOCATIONS SHALL BE MARKED SUITABLE FOR WET LOCATIONS OR SUITABLE FOR DAMP LOCATIONS. (NEC 410.10(A))

KEYED NOTES

1. CEILING FAN OR LIGHTING FIXTURE TO BE DETERMINED. VERIFY W/ OWNER FOR ACTUAL TO LOCATION. OUTLET BOX/SYSTEMS SHALL BE LISTED AND MARKED BY THE OEM AS SUITABLE FOR THIS PURPOSE. CEILING -SUSPENDED (PADDLE) FANS SHALL NOT WEIGH MORE THAN 70 LBS. FOR OUTLET BOX/SYSTEMS DESIGNED TO SUPPORT CEILING-SUSPENDED FANS THAT WEIGH MORE THAN 35 LBS, THE REQUIRED MARKING SHALL INCLUDE THE MAXIMUM WEIGHT TO BE SUPPORTED.
2. DENOTES THE CONTROL FOR THE CEILING FAN CONNECTED TO THE J-BOX PER NOTE #1. VERIFY W/ SUPPLIER AND PROVIDE DIMMER CONTROL IF THE LIGHTS ARE INCANDESCENT.
3. DENOTES HALF-HOT RECEPTACLE ON SWITCH LEG 'b' IN THIS AREA.
4. SPLIT CIRCUITED HALF-SWITCHED DUPLEX RECEPTACLE FOR GARBAGE DISPOSER AND DISHWASHER BELOW KITCHEN SINK. CONNECT THE SWITCHED SIDE OF THE RECEPTACLE TO A MOTOR RATED WALL SWITCH AND PROVIDE A DEDICATED CIRCUIT FOR EACH APPLIANCE WITH A COMMON TRIP DEVICE AT THE CIRCUIT BREAKER.
5. DENOTES APPROXIMATE LOCATION OF FC/FAU UNIT. VERIFY WITH MECHANICAL DRAWINGS FOR EXACT LOCATION.
6. REFRIGERATOR RECEPTACLE CONNECTED TO LINE SIDE OF KITCHEN SMALL APPLIANCE GFI PROTECTED COUNTER MOUNTED RECEPTACLE TO COMPLY WITH NEC SECTION 210.52(B)(1).
7. PROVIDE 15A/1P MOTOR RATED SWITCH FOR CONNECT TO THE EXHAUST FAN. REFER TO MECHANICAL PLAN FOR DETAIL.
8. PROVIDE GFCI PROTECTED RECEPTACLE OUTLET WITH ENCLOSURE THAT IS WEATHERPROOF (WP) WHETHER OR NOT THE ATTACHMENT PLUG CAP IS INSERTED. AN OUTLET BOX HOOD SHALL BE LISTED AND SHALL BE IDENTIFIED AS "EXTRA DUTY". RECEPTACLE SHALL BE LISTED AND SO IDENTIFIED AS WEATHER-RESISTANT (WR) TYPE.
9. PER SECTION 150.0(K)(3) ALL OUTDOOR LIGHTING SHALL BE HIGH EFFICACY AND CONTROLLED BY MANUAL ON/OFF SWITCH AND ONE OF THE CHOICES BELOW:
   1. PHOTOCELL AND MOTION CENSOR
   2. PHOTOCELL AND AUTOMATIC TIME SWITCH
   3. ASTRONOMIC TIME CLOCK
10. DENOTES APPROXIMATE LOCATION OF RECEPTACLE FOR CAR CHARGER. PROVIDE PRE-WIRING FOR ELECTRIC CARS (1" CO TO UNIT PANEL FOR FUTURE EVCS). VERIFY IN FIELD FOR EXACT LOCATION AND MANUFACTURER'S SPECIFICATION BEFORE ROUGH IN.
11. DENOTES GARAGE DOOR OPENER CONTROLLER.
12. DENOTES CEILING MOUNTED RECEPTACLES FOR GARAGE DOOR OPENER ON THE SWITCH LEG AS SHOWN.
13. PROVIDE POWER, LIGHTING, AND OCCUPANCY SENSOR TO ATTIC SPACE.
14. CHIME UNIT WITH INTERGRAL TRANSFORMER MOUNTED AT +7'-0" A.F.F. TO BOTTOM OF CHIME.
15. PROVIDE 15A/2P MOTOR RATED SWITCH FOR CONNECTION TO THE FC.
16. DINING RECEPTACLE CONNECTED TO LINE SIDE OF KITCHEN SMALL APPLIANCE GFI PROTECTED COUNTER MOUNTED RECEPTACLE TO COMPLY WITH NEC SECTION 210.52(B)(1).
17. PROVIDE PLUG-CONNECTED MOTOR WITH MAIN SWITCH, BACKUP FUSE AND ADDITIONAL PROTECTION FOR PUMP.
18. BUFFER TANK PROVIDES OPTION FOR (2) 3KW HEATERS.

LOW VOLTAGE KEYED NOTES

- TV (CATV). PROVIDE OUTLET (1) RG6 & (1) CAT5. RUN CABLE TO THE CATV BOX AND RUN CAT5 CABLE TO THE APPROPRIATE DESTINATION. VERIFY WITH TV SERVICE PROVIDER AND IT CONSULTANT BEFORE ROUGH-IN.
- COMBINATION PHONE AND DATA. PROVIDE (1) CAT 6 CABLE PHONE AND (1) CAT6 CABLE FOR DATA BACK TO STRUCTURED MEDIA ENCLOSURE. PROVIDE 2-PORT COVER PLATE MOUNTED WITHIN 2-FEET OF 120V RECEPTACLE.
- PHONE. PROVIDE (1) CAT 6 CABLE PHONE BACK TO STRUCTURED MEDIA ENCLOSURE. PROVIDE 1-PORT COVER PLATE MOUNTED +42" AFF.
- DATA. PROVIDE (1) CAT 6 CABLE BACK TO STRUCTURED MEDIA ENCLOSURE. PROVIDE 1-PORT COVER PLATE MOUNTED 2-FEET OF 120V RECEPTACLE.
- STRUCTURED MEDIA ENCLOSURE. COORDINATE WITH LOW VOLTAGE CONTRACTOR. PROVIDE DUPLEX RECEPTACLE OUTLET INSIDE ENCLOSURE, SURGE PROTECTED 15 AMP I.E. LEGRAND 5362WSP OR LEVITON 47605-ACS. IN-BOUND SERVICES SHALL TERMINATE IN THIS ENCLOSURE AND INDIVIDUAL CONNECTIONS SHALL BE PROVIDED TO TELEVISION, DATA AND TELEPHONE DEVICES. PROVIDE CONDUIT RUN FROM THE STRUCTURED ENCLOSURE TO THE TELEPHONE AND CABLE COMPANY "POC".

FLOOR PLAN - ELECTRICAL POWER | 1

GOUVIS engineering consulting group, inc.
15 Studebaker
Irvine
CA 92618

Irvine
tel 949.752.1612
fax 949.752.5321

Palm Springs
tel 760.323.5090

REGISTERED PROFESSIONAL ENGINEER
MEHDI HOSSEINZADEH
E 22037
ELECTRICAL
STATE OF CALIFORNIA

DATE SIGNED: 3/24/21

RESTRICTIVE NOTICE

THESE DESIGNS, DRAWINGS, AND SPECIFICATIONS ARE THE EXCLUSIVE PROPERTY OF GOUVIS ENGINEERING CONSULTING GROUP. THEY ARE THE SUBJECTOF COPYRIGHT AND OTHER LEGAL PROTECTION. THEY MAY BE USED ONLY BY THEIR INTENDED RECIPIENT AND ONLY FOR THE PROJECT DEPICTED HEREIN. NO PART OF THESE DRAWINGS ARE TO BE COPIED, TRANSFERRED, REPRODUCED, NOR CAN THEY BE USED, IN WHOLE OR IN PART, BY ANY OTHER PERSON OR FOR ANY OTHER PROJECT OR STRUCTURE, WITHOUT THE PRIOR EXPRESS WRITTEN CONSENT OF GOUVIS ENGINEERING CONSULTING GROUP

© 2017 GOUVIS ENGINEERING CONSULTING GROUP INC. - ALL RIGHTS RESERVED

PROJECT:
BORSTEIN RESIDENCE

NOT FOR BID OR CONSTRUCTION

DEVELOPER:

ARCHITECT:
Architeyk

LOCATION:
188 Homewood Road
Los Angeles
CA, 90049

REVISIONS

NO.	DATE	DESCRIPTION

SHEET NAME:
MAIN LEVEL FLOOR PLAN - POWER

PROJECT NUMBER:
65671

ENGINEER:

DRAFTER:

SHEET NUMBER:
E-2.1A

ISSUED DATE: 8/24/2020

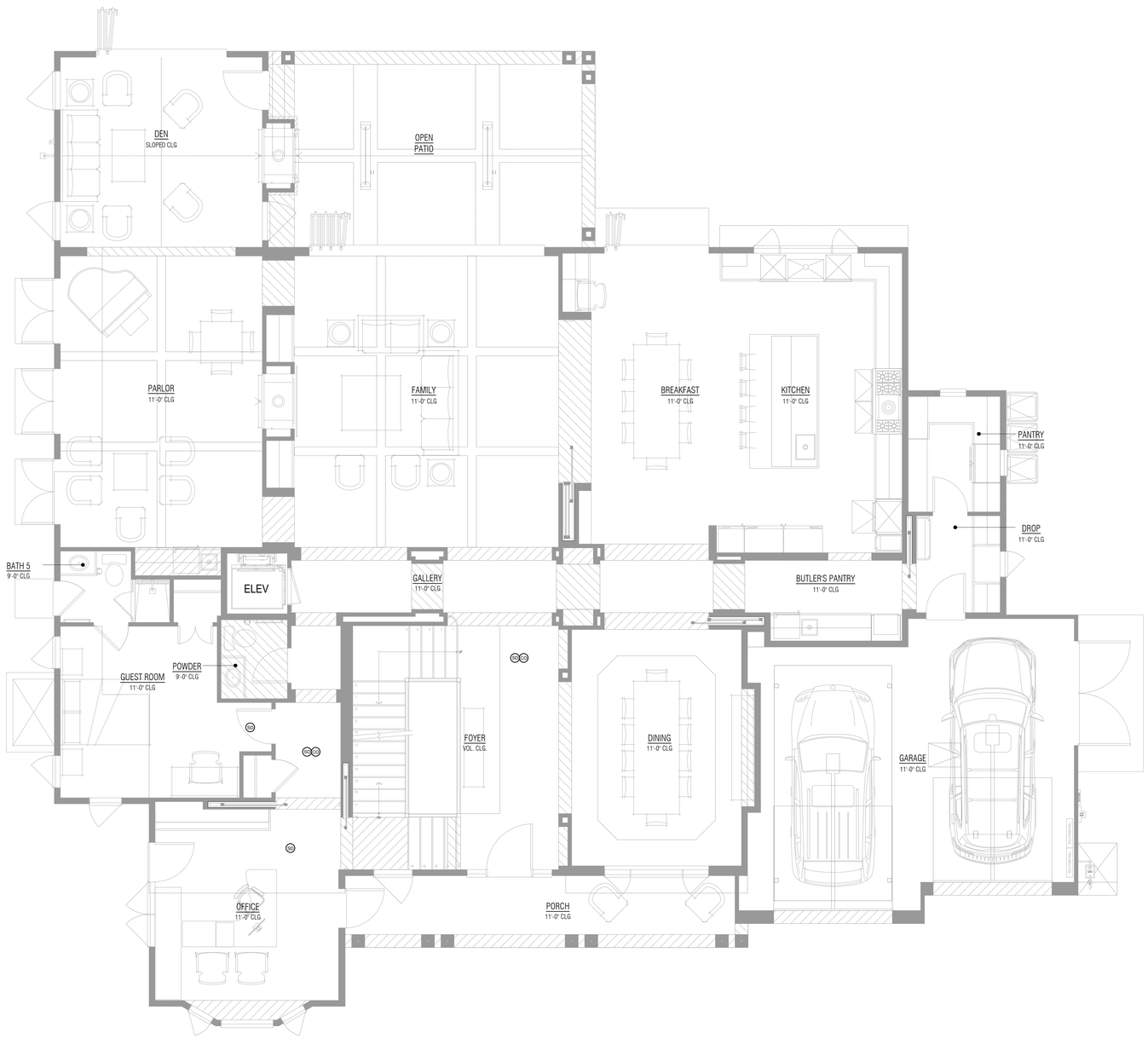

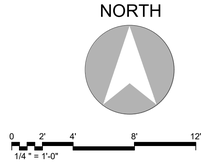

FLOOR PLAN - ELECTRICAL POWER

1

SMOKE DETECTORS NOTES

1. SMOKE ALARMS AND SMOKE DETECTORS SHALL NOT BE LOCATED WHERE AMBIENT CONDITION, INCLUDING HUMIDITY AND TEMPERATURE, ARE OUTSIDE THE LIMITS SPECIFIED BY THE MANUFACTURER'S PUBLISHED INSTRUCTIONS.
2. SMOKE ALARMS OR SMOKE DETECTORS SHALL BE INSTALLED A MINIMUM OF 20 FOOT HORIZONTAL DISTANCE FROM A PERMANENTLY INSTALLED COOKING APPLIANCE, EXCEPTION IONIZATION SMOKE ALARMS OR PHOTOELECTRIC SMOKE ALARMS PER CODE.
3. INSTALLATION NEAR BATHROOMS. SMOKE ALARMS SHALL BE INSTALLED NOT LESS THAN A 3 FOOT HORIZONTAL DISTANCE FROM THE DOOR OR OPENING OF A BATHROOM THAT CONTAINS A BATHTUB OR SHOWER UNLESS THIS WOULD PREVENT PLACEMENT OF A SMOKE ALARM REQUIRED BY OTHER SECTION OF THE CODE.
4. SMOKE ALARMS AND SMOKE DETECTORS SHALL NOT BE INSTALLED WITH A 36 INCH HORIZONTAL PATH FROM THE SUPPLY REGISTERS OF A FORCED AIR HEATING OR COOLING SYSTEM AND SHLLE BE INSTALLED OUTSIDE OF THE DIRECT AIR FLOW FROM THOSE REGISTERS.
5. CARBON MONOXIDE/ SMOKE DETECTORS SHALL BE PERMANENTLY WIRED AND PROVIDED WITH BATTERY BACK-UP. SMOKE DETECTORS ARE TO BE INTERCONNECTED WITH-IN EACH UNIT SO THAT ALL DETECTORS WITH-IN THE UNIT WILL SOUND THEIR ALARMS ON ACTIVATION OF ANY DETECTOR IN THE UNIT.
6. WHERE THE HIGHEST POINT OF A CEILING IN A ROOM THAT OPENS TO THE HALLWAY SERVING THE BEDROOMS EXCEEDS THAT OF THE OPENING INTO THE HALLWAY BE 24 INCHES OR MORE, SMOKE DETECTORS SHALL BE INSTALLED IN THE HALLWAY AND IN THE ADJACENT ROOM WITHIN 12 INCHES FROM THE HIGHEST POINT OF THE CEILING.
7. CARBON MONOXIDE/ SMOKE DETECTORS INTERCONNECTED SHALL BE INSTALLED WITHIN EACH DWELLING UNIT BEFORE APPROVAL BY THE FIRE DEPARTMENT.

GENERAL NOTES

1. PROVIDE VACANCY SENSOR/DIMMER TO ALL LUMINAIRES REQUIRED BY SECTION 150.0 OF 2019 TITLE 24 PART 6.
2. THIS DRAWING IS FOR REFERENCE ONLY. WIRE CKT 20 ON THE PLAN TO ALL DETECTORS FOR A COMPLETE AND OPERATIONAL SYSTEM. VERIFY W/LOCAL JURISDICTION FOR ALARM DETECTOR REQUIREMENT BEFORE ROUGH-IN.
3. IN DWELLING AREA SPECIFIED IN CEC 2019 SECTION 210.52; (A) WALL SPACE, (B) SMALL-APPLIANCE CIRCUIT, (C) COUNTERTOP SPACE, (D) BATHROOM AREA, (E) OUTDOORS, (F) LAUNDRY AREA, (G) GARAGE, AND (H) HALLWAYS; ALL 125-VOLT, 15- AND 20- AMPERE RECEPTACLES SHALL BE LISTED TAMPER-RESISTANT RECEPTACLES.
4. OUTLETS INSTALLED IN KITCHENS, FAMILY ROOMS, LIVING ROOMS, PARLORS, LIBRARIES, DENS, BEDROOMS, SUNROOMS, RECREATION ROOMS, CLOSETS, HALLWAYS, LAUNDRY AREAS OR SIMILAR ROOMS OR AREAS WILL BE PROTECTED BY A LISTED ARC-FAULT CIRCUIT INTERRUPTER, COMBINATION-TYPE, INSTALLED TO PROVIDE PROTECTION OF THE BRANCH CIRCUIT.
5. ALL NEW CARBON MONOXIDE ALARM ARE 120V HARD-WIRED WITH BATTERY BACKUP; INTERCONNECTED WITH OC SENSOR, AND ARE AUDIBLE IN ALL SLEEPING ROOMS.
6. ELECTRICAL CONTRACTOR MUST VERIFY MECHANICAL EQUIPMENT INFORMATION FOR MECHANICAL DRAWING BEFORE ISSUING ANY BID. NOTIFY ENGINEER IMMEDIATELY IF ANY DISCREPANCY OCCUR.
7. THE HEIGHT OF THE OUTLETS AND SWITCHES ARE NOT NOTED ON THE LEGEND OR IN THE UNIT PLANS. REFER TO "TYPICAL ELECTRICAL DEVICE HEIGHT ON E-0.3"
8. ALL DWELLING UNIT LUMINAIRES SHALL BE HIGH EFFICACY IN ACCORDANCE WITH TABLE 150.0 OF 2019 BUILDING ENERGY EFFICIENCY STANDARDS, TITLE 24 PART 6.
9. ELECTRICAL VEHICLE SUPPLY EQUIPMENT (EVSE) IS REQUIRED IN NEW ONE- AND TWO-FAMILY DWELLINGS AND TOWNHOMES WITH ATTACHED GARAGES.
10. NEW GARAGES SHALL HAVE BATTERY BACK-UP INSTALLED FOR ANY GARAGE DOOR OPENERS. SB969.
12. PROVIDE A MINIMUM OF TWO 20-AMP SMALL APPLIANCE BRANCH CIRCUITS. THESE CIRCUITS SHALL SERVE ALL OUTLETS IN THE KITCHEN, PANTRY, BREAKFAST ROOM, DINING ROOM OR SIMILAR AREA OF THE DWELLING. THESE CIRCUIT SHALL HAVE NO OTHER OUTLETS EXCEPT IN THE PANTRY, BREAKFAST ROOM, DINING ROOM OR SIMILAR AREA OF THE DWELLING. THIS CIRCUIT MAY SERVE A WALL SWITCH CONTROLLED RECEPTACLE PROVIDED IN LIEU OF LIGHTING OUTLET.
13. PROVIDE A MINIMUM 20-AMP CIRCUIT FOR EACH OF THE FOLLOWING FASTENED IN PLACE APPLIANCES, DISHWASHER, TRASH COMPACTOR AND MICROWAVE OVEN.
14. PROVIDE A MINIMUM 15-AMP REFRIDGERATION EQUIPMENT BRANCH CIRCUIT. THIS CIRCUIT SHALL HAVE NO OTHER OUTLETS.
15. PROVIE A 20-AMP LAUNDRY BRANCH CIRCUIT. THIS CIRCUIT MAY SERVCE ONE ADDITIONAL OUTLET IN THE LAUNDRY AREA.
16. PROVIDE A MINIMUM 20-AMP BATHROOM BRANCH CIRCUIT. THIS CIRCUIT MAY SERVE MORE THAN ONE BATHROOM, HOWEVER MAY NOT HAVE OTHER OUTLETS.
17. THE MAXIMUM NUMBER OF OUTLETS ON A 15-AMPERE, 125-VOLT LUMINAIRE CIRCUIT SHALL BE TWELVE (12) AND SHALL NOT CONTAIN GENERAL-PURPOSE OUTLETS. SMOKE DETECTOR OUTLETS NEED NOT BE COUNTED. IC RATED RECESSED LUMINAIRES AND LOW WATTAGE ENERGY EFFICIENT LUMINAIRES MAY USE ARTICLE 220.14(D) FOR COMPUTING MAXIMUM NUMBER OF LUMINAIRES.
18. ALL LUMINAIRES (FIXTURE) INSTALLED IN DAMP LOCATIONS SHALL BE MARKED SUITABLE FOR WET LOCATIONS OR SUITABLE FOR DAMP LOCATIONS. (NEC 410.10(A))

KEYED NOTES

1. CEILING FAN OR LIGHTING FIXTURE TO BE DETERMINED. VERIFY W/ OWNER FOR ACTUAL TO LOCATION. OUTLET BOX/SYSTEMS SHALL BE LISTED AND MARKED BY THE OEM AS SUITABLE FOR THIS PURPOSE. CEILING -SUSPENDED (PADDLE) FANS SHALL NOT WEIGH MORE THAN 70 LBS. FOR OUTLET BOX/SYSTEMS DESIGNED TO SUPPORT CEILING-SUSPENDED FANS THAT WEIGH MORE THAN 35 LBS, THE REQUIRED MARKING SHALL INCLUDE THE MAXIMUM WEIGHT TO BE SUPPORTED.
2. DENOTES THE CONTROL FOR THE CEILING FAN CONNECTED TO THE J-BOX PER NOTE #1. VERIFY W/ SUPPLIER AND PROVIDE DIMMER CONTROL IF THE LIGHTS ARE INCANDESCENT.
3. DENOTES HALF-HOT RECEPTACLE ON SWITCH LEG 'X' IN THIS AREA.
4. SPLIT CIRCUITED HALF-SWITCHED DUPLEX RECEPTACLE FOR GARBAGE DISPOSER AND DISHWASHER BELOW KITCHEN SINK. CONNECT THE SWITCHED SIDE OF THE RECEPTACLE TO A MOTOR RATED WALL SWITCH AND PROVIDE A DEDICATED CIRCUIT FOR EACH APPLIANCE WITH A COMMON TRIP DEVICE AT THE CIRCUIT BREAKER.
5. DENOTES APPROXIMATE LOCATION OF FC/FAU UNIT. VERIFY WITH MECHANICAL DRAWINGS FOR EXACT LOCATION.
6. REFRIGERATOR RECEPTACLE CONNECTED TO LINE SIDE OF KITCHEN SMALL APPLIANCE GFI PROTECTED COUNTER MOUNTED RECEPTACLE TO COMPLY WITH NEC SECTION 210.52(B)(1).
7. PROVIDE 15A/1P MOTOR RATED SWITCH FOR CONNECT TO THE EXHAUST FAN. REFER TO MECHANICAL PLAN FOR DETAIL.
8. PROVIDE GFCI PROTECTED RECEPTACLE OUTLET WITH ENCLOSURE THAT IS WEATHERPROOF (WP) WHETHER OR NOT THE ATTACHMENT PLUG CAP IS INSERTED. AN OUTLET BOX HOOD SHALL BE LISTED AND SHALL BE IDENTIFIED AS "EXTRA DUTY". RECEPTACLE SHALL BE LISTED AND SO IDENTIFIED AS WEATHER-RESISTANT (WR) TYPE.
9. PER SECTION 150.0(K)(3) ALL OUTDOOR LIGHTING SHALL BE HIGH EFFICACY AND CONTROLLED BY MANUAL ON/OFF SWITCH AND ONE OF THE CHOICES BELOW:
   1. PHOTOCELL AND MOTION CENSOR
   2. PHOTOCELL AND AUTOMATIC TIME SWITCH
   3. ASTRONOMIC TIME CLOCK
10. DENOTES APPROXIMATE LOCATION OF RECEPTACLE FOR CAR CHARGER. PROVIDE PRE-WIRING FOR ELECTRIC CARS (1" CO TO UNIT PANEL FOR FUTURE EVCS). VERIFY IN FIELD FOR EXACT LOCATION AND MANUFACTURER'S SPECIFICATION BEFORE ROUGH IN.
11. DENOTES GARAGE DOOR OPENER CONTROLLER.
12. DENOTES CEILING MOUNTED RECEPTACLES FOR GARAGE DOOR OPENER ON THE SWITCH LEG AS SHOWN.
13. PROVIDE POWER, LIGHTING, AND OCCUPANCY SENSOR TO ATTIC SPACE.
14. CHIME UNIT WITH INTERGRAL TRANSFORMER MOUNTED AT +7'-0" A.F.F. TO BOTTOM OF CHIME.
15. PROVIDE 15A/2P MOTOR RATED SWITCH FOR CONNECTION TO THE FC.
16. DINING RECEPTACLE CONNECTED TO LINE SIDE OF KITCHEN SMALL APPLIANCE GFI PROTECTED COUNTER MOUNTED RECEPTACLE TO COMPLY WITH NEC SECTION 210.52(B)(1).
17. PROVIDE PLUG-CONNECTED MOTOR WITH MAIN SWITCH, BACKUP FUSE AND ADDITIONAL PROTECTION FOR PUMP.
18. BUFFER TANK PROVIDES OPTION FOR (2) 3KW HEATERS.

LOW VOLTAGE KEYED NOTES

- TV (CATV). PROVIDE OUTLET (1) RG6 & (1) CAT5. RUN CABLE TO THE CATV BOX AND RUN CAT5 CABLE TO THE APPROPRIATE DESTINATION. VERIFY WITH TV SERVICE PROVIDER AND IT CONSULTANT BEFORE ROUGH-IN.
- COMBINATION PHONE AND DATA. PROVIDE (1) CAT 6 CABLE PHONE AND (1) CAT6 CABLE FOR DATA BACK TO STRUCTURED MEDIA ENCLOSURE. PROVIDE 2-PORT COVER PLATE MOUNTED WITHIN 2-FEET OF 120V RECEPTACLE.
- PHONE. PROVIDE (1) CAT 6 CABLE PHONE BACK TO STRUCTURED MEDIA ENCLOSURE. PROVIDE 1-PORT COVER PLATE MOUNTED +42" AFF.
- DATA. PROVIDE (1) CAT 6 CABLE BACK TO STRUCTURED MEDIA ENCLOSURE. PROVIDE 1-PORT COVER PLATE MOUNTED 2-FEET OF 120V RECEPTACLE.
- STRUCTURED MEDIA ENCLOSURE. COORDINATE WITH LOW VOLTAGE CONTRACTOR. PROVIDE DUPLEX RECEPTACLE OUTLET INSIDE ENCLOSURE, SURGE PROTECTED 15 AMP I.E. LEGRAND 5362WSP OR LEVITON 47605-ACS. IN-BOUND SERVICES SHALL TERMINATE IN THIS ENCLOSURE AND INDIVIDUAL CONNECTIONS SHALL BE PROVIDED TO TELEVISION, DATA AND TELEPHONE DEVICES. PROVIDE CONDUIT RUN FROM THE STRUCTURED ENCLOSURE TO THE TELEPHONE AND CABLE COMPANY "POC".

GOUVIS engineering consulting group, inc.

15 Studebaker
Irvine
CA 92618

Irvine
tel 949.752.1612
fax 949.752.5321

Palm Springs
tel 760.323.5090

REGISTERED PROFESSIONAL ENGINEER
REZA HOSSEINZADEH
E 22037
ELECTRICAL
STATE OF CALIFORNIA

DATE SIGNED: 3/24/21

RESTRICTIVE NOTICE

THESE DESIGNS, DRAWINGS, AND SPECIFICATIONS ARE THE EXCLUSIVE PROPERTY OF GOUVIS ENGINEERING CONSULTING GROUP. THEY ARE THE SUBJECTOF COPYRIGHT AND OTHER LEGAL PROTECTION. THEY MAY BE USED ONLY BY THEIR INTENDED RECIPIENT AND ONLY FOR THE PROJECT DEPCTED HEREIN. NO PART OF THESE DRAWINGS ARE TO BE COPIED, TRANSFERRED, REPRODUCED, NOR CAN THEY BE USED, IN WHOLE OR IN PART, BY ANY OTHER PERSON OR FOR ANY OTHER PROJECT OR STRUCTURE, WITHOUT THE PRIOR EXPRESS WRITTEN CONSENT OF GOUVIS ENGINEERING CONSULTING GROUP

© 2017 GOUVIS ENGINEERING CONSULTING GROUP INC. - ALL RIGHTS RESERVED

PROJECT:
BORSTEIN RESIDENCE

NOT FOR BID OR CONSTRUCTION

DEVELOPER:

ARCHITECT:
Architeyk

LOCATION:
188 Homewood Road
Los Angeles
CA, 90049

REVISIONS

NO.	DATE	DESCRIPTION

SHEET NAME:
MAIN LEVEL FLOOR PLAN - LIGHTING

PROJECT NUMBER:
65671

ENGINEER:

DRAFTER:

SHEET NUMBER:
E-2.1B

ISSUED DATE: 8/24/2020

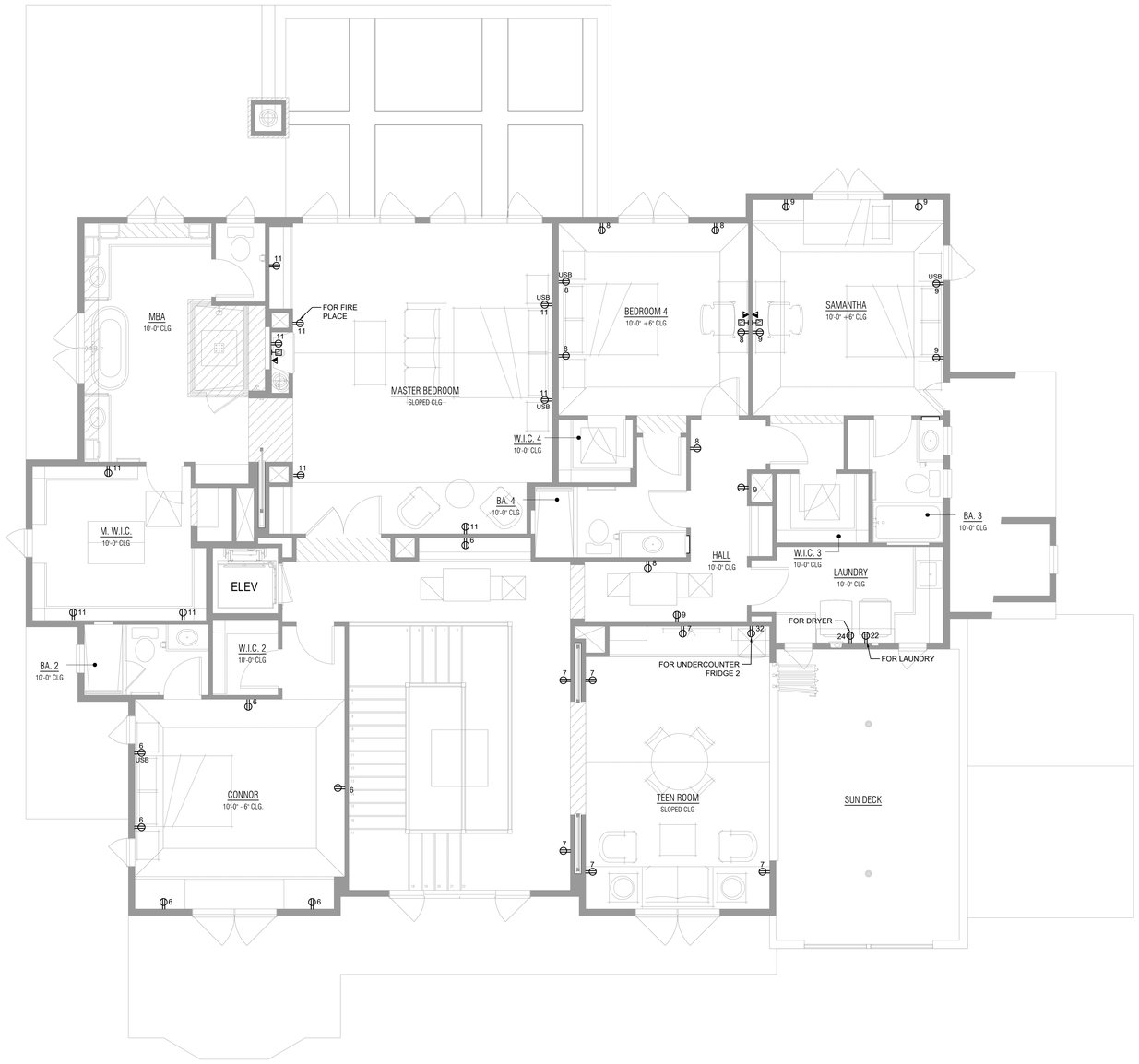

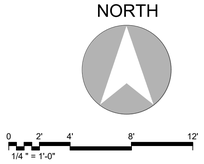

FLOOR PLAN - ELECTRICAL LIGHTING | 1

SMOKE DETECTORS NOTES

1. SMOKE ALARMS AND SMOKE DETECTORS SHALL NOT BE LOCATED WHERE AMBIENT CONDITION, INCLUDING HUMIDITY AND TEMPERATURE, ARE OUTSIDE THE LIMITS SPECIFIED BY THE MANUFACTURER'S PUBLISHED INSTRUCTIONS.
2. SMOKE ALARMS OR SMOKE DETECTORS SHALL BE INSTALLED A MINIMUM OF 20 FOOT HORIZONTAL DISTANCE FROM A PERMANENTLY INSTALLED COOKING APPLIANCE, EXCEPTION IONIZATION SMOKE ALARMS OR PHOTOELECTRIC SMOKE ALARMS PER CODE.
3. INSTALLATION NEAR BATHROOMS. SMOKE ALARMS SHALL BE INSTALLED NOT LESS THAN A 3 FOOT HORIZONTAL DISTANCE FROM THE DOOR OR OPENING OF A BATHROOM THAT CONTAINS A BATHTUB OR SHOWER UNLESS THIS WOULD PREVENT PLACEMENT OF A SMOKE ALARM REQUIRED BY OTHER SECTION OF THE CODE.
4. SMOKE ALARMS AND SMOKE DETECTORS SHALL NOT BE INSTALLED WITH A 36 INCH HORIZONTAL PATH FROM THE SUPPLY REGISTERS OF A FORCED AIR HEATING OR COOLING SYSTEM AND SHLLE BE INSTALLED OUTSIDE OF THE DIRECT AIR FLOW FROM THOSE REGISTERS.
5. CARBON MONOXIDE/ SMOKE DETECTORS SHALL BE PERMANENTLY WIRED AND PROVIDED WITH BATTERY BACK-UP. SMOKE DETECTORS ARE TO BE INTERCONNECTED WITH-IN EACH UNIT SO THAT ALL DETECTORS WITH-IN THE UNIT WILL SOUND THEIR ALARMS ON ACTIVATION OF ANY DETECTOR IN THE UNIT.
6. WHERE THE HIGHEST POINT OF A CEILING IN A ROOM THAT OPENS TO THE HALLWAY SERVING THE BEDROOMS EXCEEDS THAT OF THE OPENING INTO THE HALLWAY BE 24 INCHES OR MORE, SMOKE DETECTORS SHALL BE INSTALLED IN THE HALLWAY AND IN THE ADJACENT ROOM WITHIN 12 INCHES FROM THE HIGHEST POINT OF THE CEILING.
7. CARBON MONOXIDE/ SMOKE DETECTORS INTERCONNECTED SHALL BE INSTALLED WITHIN EACH DWELLING UNIT BEFORE APPROVAL BY THE FIRE DEPARTMENT.

GENERAL NOTES

1. PROVIDE VACANCY SENSOR/DIMMER TO ALL LUMINAIRES REQUIRED BY SECTION 150.0 OF 2019 TITLE 24 PART 6.
2. THIS DRAWING IS FOR REFERENCE ONLY. WIRE CKT 20 ON THE PLAN TO ALL DETECTORS FOR A COMPLETE AND OPERATIONAL SYSTEM. VERIFY W/LOCAL JURISDICTION FOR ALARM DETECTOR REQUIREMENT BEFORE ROUGH-IN.
3. IN DWELLING AREA SPECIFIED IN CEC 2019 SECTION 210.52; (A) WALL SPACE, (B) SMALL-APPLIANCE CIRCUIT, (C) COUNTERTOP SPACE, (D) BATHROOM AREA, (E) OUTDOORS, (F) LAUNDRY AREA, (G) GARAGE, AND (H) HALLWAYS; ALL 125-VOLT, 15- AND 20- AMPERE RECEPTACLES SHALL BE LISTED TAMPER-RESISTANT RECEPTACLES.
4. OUTLETS INSTALLED IN KITCHENS, FAMILY ROOMS, LIVING ROOMS, PARLORS, LIBRARIES, DENS, BEDROOMS, SUNROOMS, RECREATION ROOMS, CLOSETS, HALLWAYS, LAUNDRY AREAS OR SIMILAR ROOMS OR AREAS WILL BE PROTECTED BY A LISTED ARC-FAULT CIRCUIT INTERRUPTER, COMBINATION-TYPE, INSTALLED TO PROVIDE PROTECTION OF THE BRANCH CIRCUIT.
5. ALL NEW CARBON MONOXIDE ALARM ARE 120V HARD-WIRED WITH BATTERY BACKUP; INTERCONNECTED WITH OC SENSOR, AND ARE AUDIBLE IN ALL SLEEPING ROOMS.
6. ELECTRICAL CONTRACTOR MUST VERIFY MECHANICAL EQUIPMENT INFORMATION FOR MECHANICAL DRAWING BEFORE ISSUING ANY BID. NOTIFY ENGINEER IMMEDIATELY IF ANY DISCREPANCY OCCUR.
7. THE HEIGHT OF THE OUTLETS AND SWITCHES ARE NOT NOTED ON THE LEGEND OR IN THE UNIT PLANS. REFER TO "TYPICAL ELECTRICAL DEVICE HEIGHT ON E-0.3"
8. ALL DWELLING UNIT LUMINAIRES SHALL BE HIGH EFFICACY IN ACCORDANCE WITH TABLE 150.0 OF 2019 BUILDING ENERGY EFFICIENCY STANDARDS, TITLE 24 PART 6.
9. ELECTRICAL VEHICLE SUPPLY EQUIPMENT (EVSE) IS REQUIRED IN NEW ONE- AND TWO-FAMILY DWELLINGS AND TOWNHOMES WITH ATTACHED GARAGES.
10. NEW GARAGES SHALL HAVE BATTERY BACK-UP INSTALLED FOR ANY GARAGE DOOR OPENERS. SB969.
12. PROVIDE A MINIMUM OF TWO 20-AMP SMALL APPLIANCE BRANCH CIRCUITS. THESE CIRCUITS SHALL SERVE ALL OUTLETS IN THE KITCHEN, PANTRY, BREAKFAST ROOM, DINING ROOM OR SIMILAR AREA OF THE DWELLING. THESE CIRCUIT SHALL HAVE NO OTHER OUTLETS EXCEPT IN THE PANTRY, BREAKFAST ROOM, DINING ROOM OR SIMILAR AREA OF THE DWELLING. THIS CIRCUIT MAY SERVE A WALL SWITCH CONTROLLED RECEPTACLE PROVIDED IN LIEU OF LIGHTING OUTLET.
13. PROVIDE A MINIMUM 20-AMP CIRCUIT FOR EACH OF THE FOLLOWING FASTENED IN PLACE APPLIANCES, DISHWASHER, TRASH COMPACTOR AND MICROWAVE OVEN.
14. PROVIDE A MINIMUM 15-AMP REFRIDGERATION EQUIPMENT BRANCH CIRCUIT. THIS CIRCUIT SHALL HAVE NO OTHER OUTLETS.
15. PROVIE A 20-AMP LAUNDRY BRANCH CIRCUIT. THIS CIRCUIT MAY SERVCE ONE ADDITIONAL OUTLET IN THE LAUNDRY AREA.
16. PROVIDE A MINIMUM 20-AMP BATHROOM BRANCH CIRCUIT. THIS CIRCUIT MAY SERVE MORE THAN ONE BATHROOM, HOWEVER MAY NOT HAVE OTHER OUTLETS.
17. THE MAXIMUM NUMBER OF OUTLETS ON A 15-AMPERE, 125-VOLT LUMINAIRE CIRCUIT SHALL BE TWELVE (12) AND SHALL NOT CONTAIN GENERAL-PURPOSE OUTLETS. SMOKE DETECTOR OUTLETS NEED NOT BE COUNTED. IC RATED RECESSED LUMINAIRES AND LOW WATTAGE ENERGY EFFICIENT LUMINAIRES MAY USE ARTICLE 220.14(D) FOR COMPUTING MAXIMUM NUMBER OF LUMINAIRES.
18. ALL LUMINAIRES (FIXTURE) INSTALLED IN DAMP LOCATIONS SHALL BE MARKED SUITABLE FOR WET LOCATIONS OR SUITABLE FOR DAMP LOCATIONS. (NEC 410.10(A))

KEYED NOTES

1. CEILING FAN OR LIGHTING FIXTURE TO BE DETERMINED. VERIFY W/ OWNER FOR ACTUAL TO LOCATION. OUTLET BOX/SYSTEMS SHALL BE LISTED AND MARKED BY THE OEM AS SUITABLE FOR THIS PURPOSE. CEILING -SUSPENDED (PADDLE) FANS SHALL NOT WEIGH MORE THAN 70 LBS. FOR OUTLET BOX/SYSTEMS DESIGNED TO SUPPORT CEILING-SUSPENDED FANS THAT WEIGH MORE THAN 35 LBS, THE REQUIRED MARKING SHALL INCLUDE THE MAXIMUM WEIGHT TO BE SUPPORTED.
2. DENOTES THE CONTROL FOR THE CEILING FAN CONNECTED TO THE J-BOX PER NOTE #1. VERIFY W/ SUPPLIER AND PROVIDE DIMMER CONTROL IF THE LIGHTS ARE INCANDESCENT.
3. DENOTES HALF-HOT RECEPTACLE ON SWITCH LEG 'N' IN THIS AREA.
4. SPLIT CIRCUITED HALF-SWITCHED DUPLEX RECEPTACLE FOR GARBAGE DISPOSER AND DISHWASHER BELOW KITCHEN SINK. CONNECT THE SWITCHED SIDE OF THE RECEPTACLE TO A MOTOR RATED WALL SWITCH AND PROVIDE A DEDICATED CIRCUIT FOR EACH APPLIANCE WITH A COMMON TRIP DEVICE AT THE CIRCUIT BREAKER.
5. DENOTES APPROXIMATE LOCATION OF FC/FAU UNIT. VERIFY WITH MECHANICAL DRAWINGS FOR EXACT LOCATION.
6. REFRIGERATOR RECEPTACLE CONNECTED TO LINE SIDE OF KITCHEN SMALL APPLIANCE GFI PROTECTED COUNTER MOUNTED RECEPTACLE TO COMPLY WITH NEC SECTION 210.52(B)(1).
7. PROVIDE 15A/1P MOTOR RATED SWITCH FOR CONNECT TO THE EXHAUST FAN. REFER TO MECHANICAL PLAN FOR DETAIL.
8. PROVIDE GFCI PROTECTED RECEPTACLE OUTLET WITH ENCLOSURE THAT IS WEATHERPROOF (WP) WHETHER OR NOT THE ATTACHMENT PLUG CAP IS INSERTED. AN OUTLET BOX HOOD SHALL BE LISTED AND SHALL BE IDENTIFIED AS "EXTRA DUTY". RECEPTACLE SHALL BE LISTED AND SO IDENTIFIED AS WEATHER-RESISTANT (WR) TYPE.
9. PER SECTION 150.0(K)(3) ALL OUTDOOR LIGHTING SHALL BE HIGH EFFICACY AND CONTROLLED BY MANUAL ON/OFF SWITCH AND ONE OF THE CHOICES BELOW:
   1. PHOTOCELL AND MOTION CENSOR
   2. PHOTOCELL AND AUTOMATIC TIME SWITCH
   3. ASTRONOMIC TIME CLOCK
10. DENOTES APPROXIMATE LOCATION OF RECEPTACLE FOR CAR CHARGER. PROVIDE PRE-WIRING FOR ELECTRIC CARS (1" CO TO UNIT PANEL FOR FUTURE EVCS). VERIFY IN FIELD FOR EXACT LOCATION AND MANUFACTURER'S SPECIFICATION BEFORE ROUGH IN.
11. DENOTES GARAGE DOOR OPENER CONTROLLER.
12. DENOTES CEILING MOUNTED RECEPTACLES FOR GARAGE DOOR OPENER ON THE SWITCH LEG AS SHOWN.
13. PROVIDE POWER, LIGHTING, AND OCCUPANCY SENSOR TO ATTIC SPACE.
14. CHIME UNIT WITH INTERGRAL TRANSFORMER MOUNTED AT +7'-0" A.F.F. TO BOTTOM OF CHIME.
15. PROVIDE 15A/2P MOTOR RATED SWITCH FOR CONNECTION TO THE FC.
16. DINING RECEPTACLE CONNECTED TO LINE SIDE OF KITCHEN SMALL APPLIANCE GFI PROTECTED COUNTER MOUNTED RECEPTACLE TO COMPLY WITH NEC SECTION 210.52(B)(1).
17. PROVIDE PLUG-CONNECTED MOTOR WITH MAIN SWITCH, BACKUP FUSE AND ADDITIONAL PROTECTION FOR PUMP.
18. BUFFER TANK PROVIDES OPTION FOR (2) 3KW HEATERS.

LOW VOLTAGE KEYED NOTES

- TV (CATV). PROVIDE OUTLET (1) RG6 & (1) CAT5. RUN CABLE TO THE CATV BOX AND RUN CAT5 CABLE TO THE APPROPRIATE DESTINATION. VERIFY WITH TV SERVICE PROVIDER AND IT CONSULTANT BEFORE ROUGH-IN.
- COMBINATION PHONE AND DATA. PROVIDE (1) CAT 6 CABLE PHONE AND (1) CAT6 CABLE FOR DATA BACK TO STRUCTURED MEDIA ENCLOSURE. PROVIDE 2-PORT COVER PLATE MOUNTED WITHIN 2-FEET OF 120V RECEPTACLE.
- PHONE. PROVIDE (1) CAT 6 CABLE PHONE BACK TO STRUCTURED MEDIA ENCLOSURE. PROVIDE 1-PORT COVER PLATE MOUNTED +42" AFF.
- DATA. PROVIDE (1) CAT 6 CABLE BACK TO STRUCTURED MEDIA ENCLOSURE. PROVIDE 1-PORT COVER PLATE MOUNTED 2-FEET OF 120V RECEPTACLE.
- STRUCTURED MEDIA ENCLOSURE. COORDINATE WITH LOW VOLTAGE CONTRACTOR. PROVIDE DUPLEX RECEPTACLE OUTLET INSIDE ENCLOSURE, SURGE PROTECTED 15 AMP I.E. LEGRAND 5362WSP OR LEVITON 47605-ACS. IN-BOUND SERVICES SHALL TERMINATE IN THIS ENCLOSURE AND INDIVIDUAL CONNECTIONS SHALL BE PROVIDED TO TELEVISION, DATA AND TELEPHONE DEVICES. PROVIDE CONDUIT RUN FROM THE STRUCTURED ENCLOSURE TO THE TELEPHONE AND CABLE COMPANY "POC".

GOUVIS engineering consulting group, inc.

15 Studebaker
Irvine
CA 92618

Irvine
tel 949.752.1612
fax 949.752.5321

Palm Springs
tel 760.323.5090

REGISTERED PROFESSIONAL ENGINEER
MEHDI HOSSEINZADEH
E 22037
ELECTRICAL
STATE OF CALIFORNIA

DATE SIGNED: 3/24/21

RESTRICTIVE NOTICE

THESE DESIGNS, DRAWINGS, AND SPECIFICATIONS ARE THE EXCLUSIVE PROPERTY OF GOUVIS ENGINEERING CONSULTING GROUP. THEY ARE THE SUBJECTOF COPYRIGHT AND OTHER LEGAL PROTECTION. THEY MAY BE USED ONLY BY THEIR INTENDED RECIPIENT AND ONLY FOR THE PROJECT DEPCTED HEREIN. NO PART OF THESE DRAWINGS ARE TO BE COPIED, TRANSFERRED, REPRODUCED, NOR CAN THEY BE USED, IN WHOLE OR IN PART, BY ANY OTHER PERSON OR FOR ANY OTHER PROJECT OR STRUCTURE, WITHOUT THE PRIOR EXPRESS WRITTEN CONSENT OF GOUVIS ENGINEERING CONSULTING GROUP

© 2017 GOUVIS ENGINEERING CONSULTING GROUP INC. - ALL RIGHTS RESERVED

PROJECT:
BORSTEIN RESIDENCE

NOT FOR BID OR CONSTRUCTION

DEVELOPER:

ARCHITECT:
Architeyk

LOCATION:
188 Homewood Road
Los Angeles
CA, 90049

REVISIONS

NO.	DATE	DESCRIPTION

SHEET NAME:
UPPER LEVEL FLOOR PLAN - POWER

PROJECT NUMBER:
65671

ENGINEER:

DRAFTER:

SHEET NUMBER:
E-2.2A

ISSUED DATE: 8/24/2020

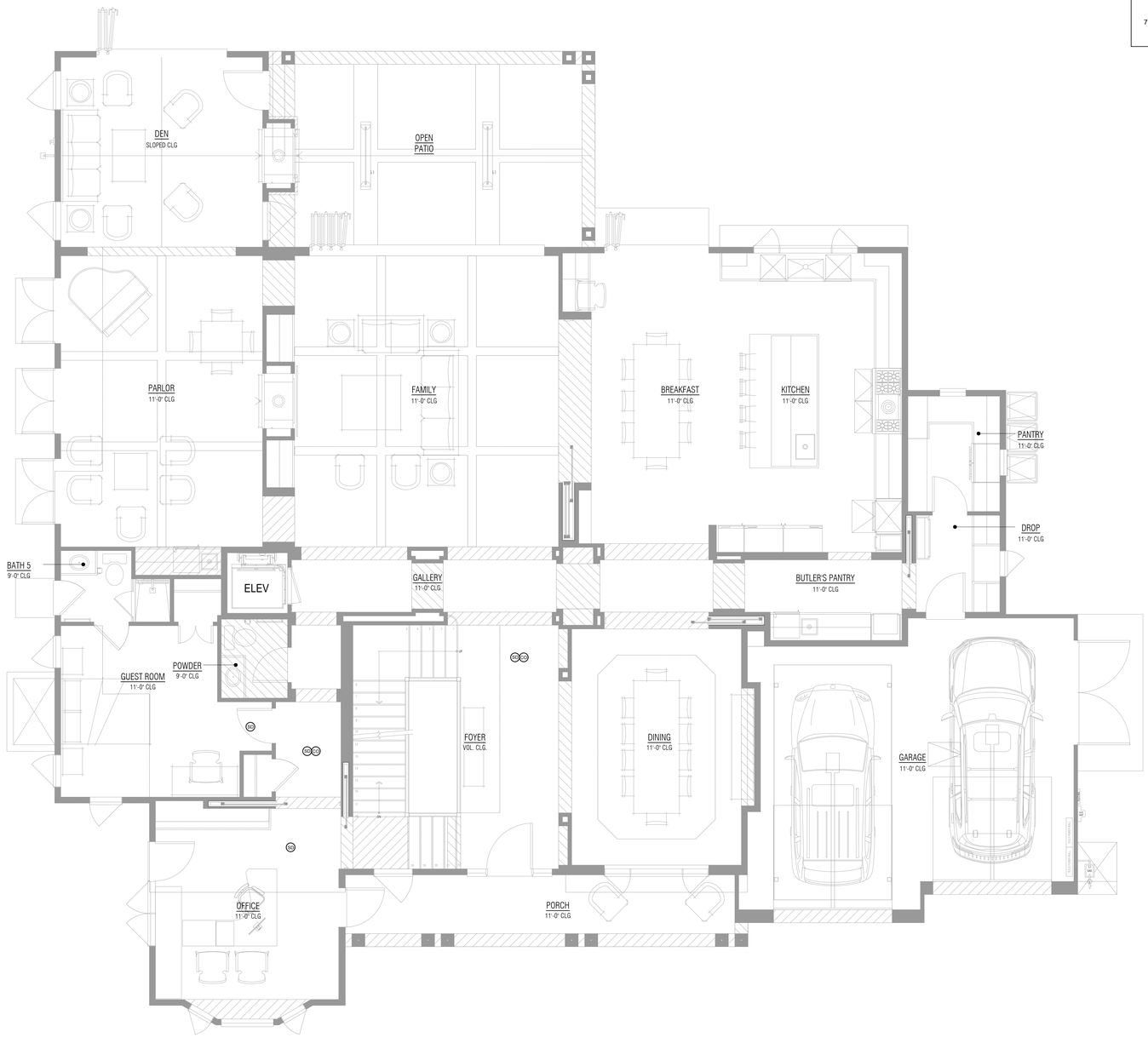

NORTH

0 2' 4' 8' 12'
1/4 " = 1'-0"

FLOOR PLAN - ELECTRICAL LIGHTING | 1

SMOKE DETECTORS NOTES

1. SMOKE ALARMS AND SMOKE DETECTORS SHALL NOT BE LOCATED WHERE AMBIENT CONDITION, INCLUDING HUMIDITY AND TEMPERATURE, ARE OUTSIDE THE LIMITS SPECIFIED BY THE MANUFACTURER'S PUBLISHED INSTRUCTIONS.
2. SMOKE ALARMS OR SMOKE DETECTORS SHALL BE INSTALLED A MINIMUM OF 20 FOOT HORIZONTAL DISTANCE FROM A PERMANENTLY INSTALLED COOKING APPLIANCE, EXCEPTION IONIZATION SMOKE ALARMS OR PHOTOELECTRIC SMOKE ALARMS PER CODE.
3. INSTALLATION NEAR BATHROOMS. SMOKE ALARMS SHALL BE INSTALLED NOT LESS THAN A 3 FOOT HORIZONTAL DISTANCE FROM THE DOOR OR OPENING OF A BATHROOM THAT CONTAINS A BATHTUB OR SHOWER UNLESS THIS WOULD PREVENT PLACEMENT OF A SMOKE ALARM REQUIRED BY OTHER SECTION OF THE CODE.
4. SMOKE ALARMS AND SMOKE DETECTORS SHALL NOT BE INSTALLED WITH A 36 INCH HORIZONTAL PATH FROM THE SUPPLY REGISTERS OF A FORCED AIR HEATING OR COOLING SYSTEM AND SHLLE BE INSTALLED OUTSIDE OF THE DIRECT AIR FLOW FROM THOSE REGISTERS.
5. CARBON MONOXIDE/ SMOKE DETECTORS SHALL BE PERMANENTLY WIRED AND PROVIDED WITH BATTERY BACK-UP. SMOKE DETECTORS ARE TO BE INTERCONNECTED WITH-IN EACH UNIT SO THAT ALL DETECTORS WITH-IN THE UNIT WILL SOUND THEIR ALARMS ON ACTIVATION OF ANY DETECTOR IN THE UNIT.
6. WHERE THE HIGHEST POINT OF A CEILING IN A ROOM THAT OPENS TO THE HALLWAY SERVING THE BEDROOMS EXCEEDS THAT OF THE OPENING INTO THE HALLWAY BE 24 INCHES OR MORE, SMOKE DETECTORS SHALL BE INSTALLED IN THE HALLWAY AND IN THE ADJACENT ROOM WITHIN 12 INCHES FROM THE HIGHEST POINT OF THE CEILING.
7. CARBON MONOXIDE/ SMOKE DETECTORS INTERCONNECTED SHALL BE INSTALLED WITHIN EACH DWELLING UNIT BEFORE APPROVAL BY THE FIRE DEPARTMENT.

GENERAL NOTES

1. PROVIDE VACANCY SENSOR/DIMMER TO ALL LUMINAIRES REQUIRED BY SECTION 150.0 OF 2019 TITLE 24 PART 6.
2. THIS DRAWING IS FOR REFERENCE ONLY. WIRE CKT 20 ON THE PLAN TO ALL DETECTORS FOR A COMPLETE AND OPERATIONAL SYSTEM. VERIFY W/LOCAL JURISDICTION FOR ALARM DETECTOR REQUIREMENT BEFORE ROUGH-IN.
3. IN DWELLING AREA SPECIFIED IN CEC 2019 SECTION 210.52; (A) WALL SPACE, (B) SMALL-APPLIANCE CIRCUIT, (C) COUNTERTOP SPACE, (D) BATHROOM AREA, (E) OUTDOORS, (F) LAUNDRY AREA, (G) GARAGE, AND (H) HALLWAYS; ALL 125-VOLT, 15- AND 20- AMPERE RECEPTACLES SHALL BE LISTED TAMPER-RESISTANT RECEPTACLES.
4. OUTLETS INSTALLED IN KITCHENS, FAMILY ROOMS, LIVING ROOMS, PARLORS, LIBRARIES, DENS, BEDROOMS, SUNROOMS, RECREATION ROOMS, CLOSETS, HALLWAYS, LAUNDRY AREAS OR SIMILAR ROOMS OR AREAS WILL BE PROTECTED BY A LISTED ARC-FAULT CIRCUIT INTERRUPTER, COMBINATION-TYPE, INSTALLED TO PROVIDE PROTECTION OF THE BRANCH CIRCUIT.
5. ALL NEW CARBON MONOXIDE ALARM ARE 120V HARD-WIRED WITH BATTERY BACKUP; INTERCONNECTED WITH OC SENSOR, AND ARE AUDIBLE IN ALL SLEEPING ROOMS.
6. ELECTRICAL CONTRACTOR MUST VERIFY MECHANICAL EQUIPMENT INFORMATION FOR MECHANICAL DRAWING BEFORE ISSUING ANY BID. NOTIFY ENGINEER IMMEDIATELY IF ANY DISCREPANCY OCCUR.
7. THE HEIGHT OF THE OUTLETS AND SWITCHES ARE NOT NOTED ON THE LEGEND OR IN THE UNIT PLANS. REFER TO "TYPICAL ELECTRICAL DEVICE HEIGHT ON E-0.3"
8. ALL DWELLING UNIT LUMINAIRES SHALL BE HIGH EFFICACY IN ACCORDANCE WITH TABLE 150.0 OF 2019 BUILDING ENERGY EFFICIENCY STANDARDS, TITLE 24 PART 6.
9. ELECTRICAL VEHICLE SUPPLY EQUIPMENT (EVSE) IS REQUIRED IN NEW ONE- AND TWO-FAMILY DWELLINGS AND TOWNHOMES WITH ATTACHED GARAGES.
10. NEW GARAGES SHALL HAVE BATTERY BACK-UP INSTALLED FOR ANY GARAGE DOOR OPENERS. SB969.
12. PROVIDE A MINIMUM OF TWO 20-AMP SMALL APPLIANCE BRANCH CIRCUITS. THESE CIRCUITS SHALL SERVE ALL OUTLETS IN THE KITCHEN, PANTRY, BREAKFAST ROOM, DINING ROOM OR SIMILAR AREA OF THE DWELLING. THESE CIRCUIT SHALL HAVE NO OTHER OUTLETS EXCEPT IN THE PANTRY, BREAKFAST ROOM, DINING ROOM OR SIMILAR AREA OF THE DWELLING. THIS CIRCUIT MAY SERVE A WALL SWITCH CONTROLLED RECEPTACLE PROVIDED IN LIEU OF LIGHTING OUTLET.
13. PROVIDE A MINIMUM 20-AMP CIRCUIT FOR EACH OF THE FOLLOWING FASTENED IN PLACE APPLIANCES, DISHWASHER, TRASH COMPACTOR AND MICROWAVE OVEN.
14. PROVIDE A MINIMUM 15-AMP REFRIDGERATION EQUIPMENT BRANCH CIRCUIT. THIS CIRCUIT SHALL HAVE NO OTHER OUTLETS.
15. PROVIE A 20-AMP LAUNDRY BRANCH CIRCUIT. THIS CIRCUIT MAY SERVCE ONE ADDITIONAL OUTLET IN THE LAUNDRY AREA.
16. PROVIDE A MINIMUM 20-AMP BATHROOM BRANCH CIRCUIT. THIS CIRCUIT MAY SERVE MORE THAN ONE BATHROOM, HOWEVER MAY NOT HAVE OTHER OUTLETS.
17. THE MAXIMUM NUMBER OF OUTLETS ON A 15-AMPERE, 125-VOLT LUMINAIRE CIRCUIT SHALL BE TWELVE (12) AND SHALL NOT CONTAIN GENERAL-PURPOSE OUTLETS. SMOKE DETECTOR OUTLETS NEED NOT BE COUNTED. IC RATED RECESSED LUMINAIRES AND LOW WATTAGE ENERGY EFFICIENT LUMINAIRES MAY USE ARTICLE 220.14(D) FOR COMPUTING MAXIMUM NUMBER OF LUMINAIRES.
18. ALL LUMINAIRES (FIXTURE) INSTALLED IN DAMP LOCATIONS SHALL BE MARKED SUITABLE FOR WET LOCATIONS OR SUITABLE FOR DAMP LOCATIONS. (NEC 410.10(A))

KEYED NOTES

1. CEILING FAN OR LIGHTING FIXTURE TO BE DETERMINED. VERIFY W/ OWNER FOR ACTUAL TO LOCATION. OUTLET BOX/SYSTEMS SHALL BE LISTED AND MARKED BY THE OEM AS SUITABLE FOR THIS PURPOSE. CEILING -SUSPENDED (PADDLE) FANS SHALL NOT WEIGH MORE THAN 70 LBS. FOR OUTLET BOX/SYSTEMS DESIGNED TO SUPPORT CEILING-SUSPENDED FANS THAT WEIGH MORE THAN 35 LBS, THE REQUIRED MARKING SHALL INCLUDE THE MAXIMUM WEIGHT TO BE SUPPORTED.
2. DENOTES THE CONTROL FOR THE CEILING FAN CONNECTED TO THE J-BOX PER NOTE #1. VERIFY W/ SUPPLIER AND PROVIDE DIMMER CONTROL IF THE LIGHTS ARE INCANDESCENT.
3. DENOTES HALF-HOT RECEPTACLE ON SWITCH LEG 'b' IN THIS AREA.
4. SPLIT CIRCUITED HALF-SWITCHED DUPLEX RECEPTACLE FOR GARBAGE DISPOSER AND DISHWASHER BELOW KITCHEN SINK. CONNECT THE SWITCHED SIDE OF THE RECEPTACLE TO A MOTOR RATED WALL SWITCH AND PROVIDE A DEDICATED CIRCUIT FOR EACH APPLIANCE WITH A COMMON TRIP DEVICE AT THE CIRCUIT BREAKER.
5. DENOTES APPROXIMATE LOCATION OF FC/FAU UNIT. VERIFY WITH MECHANICAL DRAWINGS FOR EXACT LOCATION.
6. REFRIGERATOR RECEPTACLE CONNECTED TO LINE SIDE OF KITCHEN SMALL APPLIANCE GFI PROTECTED COUNTER MOUNTED RECEPTACLE TO COMPLY WITH NEC SECTION 210.52(B)(1).
7. PROVIDE 15A/1P MOTOR RATED SWITCH FOR CONNECT TO THE EXHAUST FAN. REFER TO MECHANICAL PLAN FOR DETAIL.
8. PROVIDE GFCI PROTECTED RECEPTACLE OUTLET WITH ENCLOSURE THAT IS WEATHERPROOF (WP) WHETHER OR NOT THE ATTACHMENT PLUG CAP IS INSERTED. AN OUTLET BOX HOOD SHALL BE LISTED AND SHALL BE IDENTIFIED AS "EXTRA DUTY". RECEPTACLE SHALL BE LISTED AND SO IDENTIFIED AS WEATHER-RESISTANT (WR) TYPE.
9. PER SECTION 150.0(K)(3) ALL OUTDOOR LIGHTING SHALL BE HIGH EFFICACY AND CONTROLLED BY MANUAL ON/OFF SWITCH AND ONE OF THE CHOICES BELOW:
   1. PHOTOCELL AND MOTION CENSOR
   2. PHOTOCELL AND AUTOMATIC TIME SWITCH
   3. ASTRONOMIC TIME CLOCK
10. DENOTES APPROXIMATE LOCATION OF RECEPTACLE FOR CAR CHARGER. PROVIDE PRE-WIRING FOR ELECTRIC CARS (1" CO TO UNIT PANEL FOR FUTURE EVCS). VERIFY IN FIELD FOR EXACT LOCATION AND MANUFACTURER'S SPECIFICATION BEFORE ROUGH IN.
11. DENOTES GARAGE DOOR OPENER CONTROLLER.
12. DENOTES CEILING MOUNTED RECEPTACLES FOR GARAGE DOOR OPENER ON THE SWITCH LEG AS SHOWN.
13. PROVIDE POWER, LIGHTING, AND OCCUPANCY SENSOR TO ATTIC SPACE.
14. CHIME UNIT WITH INTERGRAL TRANSFORMER MOUNTED AT +7'-0" A.F.F. TO BOTTOM OF CHIME.
15. PROVIDE 15A/2P MOTOR RATED SWITCH FOR CONNECTION TO THE FC.
16. DINING RECEPTACLE CONNECTED TO LINE SIDE OF KITCHEN SMALL APPLIANCE GFI PROTECTED COUNTER MOUNTED RECEPTACLE TO COMPLY WITH NEC SECTION 210.52(B)(1).
17. PROVIDE PLUG-CONNECTED MOTOR WITH MAIN SWITCH, BACKUP FUSE AND ADDITIONAL PROTECTION FOR PUMP.
18. BUFFER TANK PROVIDES OPTION FOR (2) 3KW HEATERS.

LOW VOLTAGE KEYED NOTES

- TV (CATV). PROVIDE OUTLET (1) RG6 & (1) CAT5. RUN CABLE TO THE CATV BOX AND RUN CAT5 CABLE TO THE APPROPRIATE DESTINATION. VERIFY WITH TV SERVICE PROVIDER AND IT CONSULTANT BEFORE ROUGH-IN.
- COMBINATION PHONE AND DATA. PROVIDE (1) CAT 6 CABLE PHONE AND (1) CAT6 CABLE FOR DATA BACK TO STRUCTURED MEDIA ENCLOSURE. PROVIDE 2-PORT COVER PLATE MOUNTED WITHIN 2-FEET OF 120V RECEPTACLE.
- PHONE. PROVIDE (1) CAT 6 CABLE PHONE BACK TO STRUCTURED MEDIA ENCLOSURE. PROVIDE 1-PORT COVER PLATE MOUNTED +42" AFF.
- DATA. PROVIDE (1) CAT 6 CABLE BACK TO STRUCTURED MEDIA ENCLOSURE. PROVIDE 1-PORT COVER PLATE MOUNTED 2-FEET OF 120V RECEPTACLE.
- STRUCTURED MEDIA ENCLOSURE. COORDINATE WITH LOW VOLTAGE CONTRACTOR. PROVIDE DUPLEX RECEPTACLE OUTLET INSIDE ENCLOSURE, SURGE PROTECTED 15 AMP I.E. LEGRAND 5362WSP OR LEVITON 47605-ACS. IN-BOUND SERVICES SHALL TERMINATE IN THIS ENCLOSURE AND INDIVIDUAL CONNECTIONS SHALL BE PROVIDED TO TELEVISION, DATA AND TELEPHONE DEVICES. PROVIDE CONDUIT RUN FROM THE STRUCTURED ENCLOSURE TO THE TELEPHONE AND CABLE COMPANY "POC".

GOUVIS engineering consulting group, inc.

15 Studebaker
Irvine
CA 92618

Irvine
tel 949.752.1612
fax 949.752.5321

Palm Springs
tel 760.323.5090

REGISTERED PROFESSIONAL ENGINEER
MEHDI HOSSEINZADEH
E 22037
ELECTRICAL
STATE OF CALIFORNIA

DATE SIGNED: 3/24/21

RESTRICTIVE NOTICE

THESE DESIGNS, DRAWINGS, AND SPECIFICATIONS ARE THE EXCLUSIVE PROPERTY OF GOUVIS ENGINEERING CONSULTING GROUP. THEY ARE THE SUBJECTOF COPYRIGHT AND OTHER LEGAL PROTECTION. THEY MAY BE USED ONLY BY THEIR INTENDED RECIPIENT AND ONLY FOR THE PROJECT DEPCTED HEREIN. NO PART OF THESE DRAWINGS ARE TO BE COPIED, TRANSFERRED, REPRODUCED, NOR CAN THEY BE USED, IN WHOLE OR IN PART, BY ANY OTHER PERSON OR FOR ANY OTHER PROJECT OR STRUCTURE, WITHOUT THE PRIOR EXPRESS WRITTEN CONSENT OF GOUVIS ENGINEERING CONSULTING GROUP

© 2017 GOUVIS ENGINEERING CONSULTING GROUP INC. - ALL RIGHTS RESERVED

PROJECT:
BORSTEIN RESIDENCE

NOT FOR BID OR CONSTRUCTION

DEVELOPER:

ARCHITECT:
Architeyk

LOCATION:
188 Homewood Road
Los Angeles
CA, 90049

REVISIONS

NO.	DATE	DESCRIPTION

SHEET NAME:
UPPER LEVEL FLOOR PLAN - LIGHTING

PROJECT NUMBER:
65671

ENGINEER:

DRAFTER:

SHEET NUMBER:
E-2.2B

ISSUED DATE: 8/24/2020

NORTH

0 2' 4' 8' 12'
1/4 " = 1'-0"

FLOOR PLAN - ELECTRICAL LIGHTING 1

SMOKE DETECTORS NOTES

1. SMOKE ALARMS AND SMOKE DETECTORS SHALL NOT BE LOCATED WHERE AMBIENT CONDITION, INCLUDING HUMIDITY AND TEMPERATURE, ARE OUTSIDE THE LIMITS SPECIFIED BY THE MANUFACTURER'S PUBLISHED INSTRUCTIONS.
2. SMOKE ALARMS OR SMOKE DETECTORS SHALL BE INSTALLED A MINIMUM OF 20 FOOT HORIZONTAL DISTANCE FROM A PERMANENTLY INSTALLED COOKING APPLIANCE, EXCEPTION IONIZATION SMOKE ALARMS OR PHOTOELECTRIC SMOKE ALARMS PER CODE.
3. INSTALLATION NEAR BATHROOMS. SMOKE ALARMS SHALL BE INSTALLED NOT LESS THAN A 3 FOOT HORIZONTAL DISTANCE FROM THE DOOR OR OPENING OF A BATHROOM THAT CONTAINS A BATHTUB OR SHOWER UNLESS THIS WOULD PREVENT PLACEMENT OF A SMOKE ALARM REQUIRED BY OTHER SECTION OF THE CODE.
4. SMOKE ALARMS AND SMOKE DETECTORS SHALL NOT BE INSTALLED WITH A 36 INCH HORIZONTAL PATH FROM THE SUPPLY REGISTERS OF A FORCED AIR HEATING OR COOLING SYSTEM AND SHLLE BE INSTALLED OUTSIDE OF THE DIRECT AIR FLOW FROM THOSE REGISTERS.
5. CARBON MONOXIDE/ SMOKE DETECTORS SHALL BE PERMANENTLY WIRED AND PROVIDED WITH BATTERY BACK-UP. SMOKE DETECTORS ARE TO BE INTERCONNECTED WITH-IN EACH UNIT SO THAT ALL DETECTORS WITH-IN THE UNIT WILL SOUND THEIR ALARMS ON ACTIVATION OF ANY DETECTOR IN THE UNIT.
6. WHERE THE HIGHEST POINT OF A CEILING IN A ROOM THAT OPENS TO THE HALLWAY SERVING THE BEDROOMS EXCEEDS THAT OF THE OPENING INTO THE HALLWAY BE 24 INCHES OR MORE, SMOKE DETECTORS SHALL BE INSTALLED IN THE HALLWAY AND IN THE ADJACENT ROOM WITHIN 12 INCHES FROM THE HIGHEST POINT OF THE CEILING.
7. CARBON MONOXIDE/ SMOKE DETECTORS INTERCONNECTED SHALL BE INSTALLED WITHIN EACH DWELLING UNIT BEFORE APPROVAL BY THE FIRE DEPARTMENT.

GENERAL NOTES

1. PROVIDE VACANCY SENSOR/DIMMER TO ALL LUMINAIRES REQUIRED BY SECTION 150.0 OF 2019 TITLE 24 PART 6.
2. THIS DRAWING IS FOR REFERENCE ONLY. WIRE CKT 20 ON THE PLAN TO ALL DETECTORS FOR A COMPLETE AND OPERATIONAL SYSTEM. VERIFY W/LOCAL JURISDICTION FOR ALARM DETECTOR REQUIREMENT BEFORE ROUGH-IN.
3. IN DWELLING AREA SPECIFIED IN CEC 2019 SECTION 210.52; (A) WALL SPACE, (B) SMALL-APPLIANCE CIRCUIT, (C) COUNTERTOP SPACE, (D) BATHROOM AREA, (E) OUTDOORS, (F) LAUNDRY AREA, (G) GARAGE, AND (H) HALLWAYS; ALL 125-VOLT, 15- AND 20- AMPERE RECEPTACLES SHALL BE LISTED TAMPER-RESISTANT RECEPTACLES.
4. OUTLETS INSTALLED IN KITCHENS, FAMILY ROOMS, LIVING ROOMS, PARLORS, LIBRARIES, DENS, BEDROOMS, SUNROOMS, RECREATION ROOMS, CLOSETS, HALLWAYS, LAUNDRY AREAS OR SIMILAR ROOMS OR AREAS WILL BE PROTECTED BY A LISTED ARC-FAULT CIRCUIT INTERRUPTER, COMBINATION-TYPE, INSTALLED TO PROVIDE PROTECTION OF THE BRANCH CIRCUIT.
5. ALL NEW CARBON MONOXIDE ALARM ARE 120V HARD-WIRED WITH BATTERY BACKUP; INTERCONNECTED WITH OC SENSOR, AND ARE AUDIBLE IN ALL SLEEPING ROOMS.
6. ELECTRICAL CONTRACTOR MUST VERIFY MECHANICAL EQUIPMENT INFORMATION FOR MECHANICAL DRAWING BEFORE ISSUING ANY BID. NOTIFY ENGINEER IMMEDIATELY IF ANY DISCREPANCY OCCUR.
7. THE HEIGHT OF THE OUTLETS AND SWITCHES ARE NOT NOTED ON THE LEGEND OR IN THE UNIT PLANS. REFER TO "TYPICAL ELECTRICAL DEVICE HEIGHT ON E-0.3"
8. ALL DWELLING UNIT LUMINAIRES SHALL BE HIGH EFFICACY IN ACCORDANCE WITH TABLE 150.0 OF 2019 BUILDING ENERGY EFFICIENCY STANDARDS, TITLE 24 PART 6.
9. ELECTRICAL VEHICLE SUPPLY EQUIPMENT (EVSE) IS REQUIRED IN NEW ONE- AND TWO-FAMILY DWELLINGS AND TOWNHOMES WITH ATTACHED GARAGES.
10. NEW GARAGES SHALL HAVE BATTERY BACK-UP INSTALLED FOR ANY GARAGE DOOR OPENERS. SB969.
12. PROVIDE A MINIMUM OF TWO 20-AMP SMALL APPLIANCE BRANCH CIRCUITS. THESE CIRCUITS SHALL SERVE ALL OUTLETS IN THE KITCHEN, PANTRY, BREAKFAST ROOM, DINING ROOM OR SIMILAR AREA OF THE DWELLING. THESE CIRCUIT SHALL HAVE NO OTHER OUTLETS EXCEPT IN THE PANTRY, BREAKFAST ROOM, DINING ROOM OR SIMILAR AREA OF THE DWELLING. THIS CIRCUIT MAY SERVE A WALL SWITCH CONTROLLED RECEPTACLE PROVIDED IN LIEU OF LIGHTING OUTLET.
13. PROVIDE A MINIMUM 20-AMP CIRCUIT FOR EACH OF THE FOLLOWING FASTENED IN PLACE APPLIANCES, DISHWASHER, TRASH COMPACTOR AND MICROWAVE OVEN.
14. PROVIDE A MINIMUM 15-AMP REFRIDGERATION EQUIPMENT BRANCH CIRCUIT. THIS CIRCUIT SHALL HAVE NO OTHER OUTLETS.
15. PROVIE A 20-AMP LAUNDRY BRANCH CIRCUIT. THIS CIRCUIT MAY SERVCE ONE ADDITIONAL OUTLET IN THE LAUNDRY AREA.
16. PROVIDE A MINIMUM 20-AMP BATHROOM BRANCH CIRCUIT. THIS CIRCUIT MAY SERVE MORE THAN ONE BATHROOM, HOWEVER MAY NOT HAVE OTHER OUTLETS.
17. THE MAXIMUM NUMBER OF OUTLETS ON A 15-AMPERE, 125-VOLT LUMINAIRE CIRCUIT SHALL BE TWELVE (12) AND SHALL NOT CONTAIN GENERAL-PURPOSE OUTLETS. SMOKE DETECTOR OUTLETS NEED NOT BE COUNTED. IC RATED RECESSED LUMINAIRES AND LOW WATTAGE ENERGY EFFICIENT LUMINAIRES MAY USE ARTICLE 220.14(D) FOR COMPUTING MAXIMUM NUMBER OF LUMINAIRES.
18. ALL LUMINAIRES (FIXTURE) INSTALLED IN DAMP LOCATIONS SHALL BE MARKED SUITABLE FOR WET LOCATIONS OR SUITABLE FOR DAMP LOCATIONS. (NEC 410.10(A))

KEYED NOTES

1. CEILING FAN OR LIGHTING FIXTURE TO BE DETERMINED. VERIFY W/ OWNER FOR ACTUAL TO LOCATION. OUTLET BOX/SYSTEMS SHALL BE LISTED AND MARKED BY THE OEM AS SUITABLE FOR THIS PURPOSE. CEILING -SUSPENDED (PADDLE) FANS SHALL NOT WEIGH MORE THAN 70 LBS. FOR OUTLET BOX/SYSTEMS DESIGNED TO SUPPORT CEILING-SUSPENDED FANS THAT WEIGH MORE THAN 35 LBS, THE REQUIRED MARKING SHALL INCLUDE THE MAXIMUM WEIGHT TO BE SUPPORTED.
2. DENOTES THE CONTROL FOR THE CEILING FAN CONNECTED TO THE J-BOX PER NOTE #1. VERIFY W/ SUPPLIER AND PROVIDE DIMMER CONTROL IF THE LIGHTS ARE INCANDESCENT.
3. DENOTES HALF-HOT RECEPTACLE ON SWITCH LEG 'X' IN THIS AREA.
4. SPLIT CIRCUITED HALF-SWITCHED DUPLEX RECEPTACLE FOR GARBAGE DISPOSER AND DISHWASHER BELOW KITCHEN SINK. CONNECT THE SWITCHED SIDE OF THE RECEPTACLE TO A MOTOR RATED WALL SWITCH AND PROVIDE A DEDICATED CIRCUIT FOR EACH APPLIANCE WITH A COMMON TRIP DEVICE AT THE CIRCUIT BREAKER.
5. DENOTES APPROXIMATE LOCATION OF FC/FAU UNIT. VERIFY WITH MECHANICAL DRAWINGS FOR EXACT LOCATION.
6. REFRIGERATOR RECEPTACLE CONNECTED TO LINE SIDE OF KITCHEN SMALL APPLIANCE GFI PROTECTED COUNTER MOUNTED RECEPTACLE TO COMPLY WITH NEC SECTION 210.52(B)(1).
7. PROVIDE 15A/1P MOTOR RATED SWITCH FOR CONNECT TO THE EXHAUST FAN. REFER TO MECHANICAL PLAN FOR DETAIL.
8. PROVIDE GFCI PROTECTED RECEPTACLE OUTLET WITH ENCLOSURE THAT IS WEATHERPROOF (WP) WHETHER OR NOT THE ATTACHMENT PLUG CAP IS INSERTED. AN OUTLET BOX HOOD SHALL BE LISTED AND SHALL BE IDENTIFIED AS "EXTRA DUTY". RECEPTACLE SHALL BE LISTED AND SO IDENTIFIED AS WEATHER-RESISTANT (WR) TYPE.
9. PER SECTION 150.0(K)(3) ALL OUTDOOR LIGHTING SHALL BE HIGH EFFICACY AND CONTROLLED BY MANUAL ON/OFF SWITCH AND ONE OF THE CHOICES BELOW:
   1. PHOTOCELL AND MOTION CENSOR
   2. PHOTOCELL AND AUTOMATIC TIME SWITCH
   3. ASTRONOMIC TIME CLOCK
10. DENOTES APPROXIMATE LOCATION OF RECEPTACLE FOR CAR CHARGER. PROVIDE PRE-WIRING FOR ELECTRIC CARS (1" CO TO UNIT PANEL FOR FUTURE EVCS). VERIFY IN FIELD FOR EXACT LOCATION AND MANUFACTURER'S SPECIFICATION BEFORE ROUGH IN.
11. DENOTES GARAGE DOOR OPENER CONTROLLER.
12. DENOTES CEILING MOUNTED RECEPTACLES FOR GARAGE DOOR OPENER ON THE SWITCH LEG AS SHOWN.
13. PROVIDE POWER, LIGHTING, AND OCCUPANCY SENSOR TO ATTIC SPACE.
14. CHIME UNIT WITH INTERGRAL TRANSFORMER MOUNTED AT +7'-0" A.F.F. TO BOTTOM OF CHIME.
15. PROVIDE 15A/2P MOTOR RATED SWITCH FOR CONNECTION TO THE FC.
16. DINING RECEPTACLE CONNECTED TO LINE SIDE OF KITCHEN SMALL APPLIANCE GFI PROTECTED COUNTER MOUNTED RECEPTACLE TO COMPLY WITH NEC SECTION 210.52(B)(1).
17. PROVIDE PLUG-CONNECTED MOTOR WITH MAIN SWITCH, BACKUP FUSE AND ADDITIONAL PROTECTION FOR PUMP.
18. BUFFER TANK PROVIDES OPTION FOR (2) 3KW HEATERS.

LOW VOLTAGE KEYED NOTES

- TV (CATV). PROVIDE OUTLET (1) RG6 & (1) CAT5. RUN CABLE TO THE CATV BOX AND RUN CAT5 CABLE TO THE APPROPRIATE DESTINATION. VERIFY WITH TV SERVICE PROVIDER AND IT CONSULTANT BEFORE ROUGH-IN.
- COMBINATION PHONE AND DATA. PROVIDE (1) CAT 6 CABLE PHONE AND (1) CAT6 CABLE FOR DATA BACK TO STRUCTURED MEDIA ENCLOSURE. PROVIDE 2-PORT COVER PLATE MOUNTED WITHIN 2-FEET OF 120V RECEPTACLE.
- PHONE. PROVIDE (1) CAT 6 CABLE PHONE BACK TO STRUCTURED MEDIA ENCLOSURE. PROVIDE 1-PORT COVER PLATE MOUNTED +42" AFF.
- DATA. PROVIDE (1) CAT 6 CABLE BACK TO STRUCTURED MEDIA ENCLOSURE. PROVIDE 1-PORT COVER PLATE MOUNTED 2-FEET OF 120V RECEPTACLE.
- STRUCTURED MEDIA ENCLOSURE. COORDINATE WITH LOW VOLTAGE CONTRACTOR. PROVIDE DUPLEX RECEPTACLE OUTLET INSIDE ENCLOSURE, SURGE PROTECTED 15 AMP I.E. LEGRAND 5362WSP OR LEVITON 47605-ACS. IN-BOUND SERVICES SHALL TERMINATE IN THIS ENCLOSURE AND INDIVIDUAL CONNECTIONS SHALL BE PROVIDED TO TELEVISION, DATA AND TELEPHONE DEVICES. PROVIDE CONDUIT RUN FROM THE STRUCTURED ENCLOSURE TO THE TELEPHONE AND CABLE COMPANY "POC".

GOUVIS engineering consulting group, inc.

15 Studebaker
Irvine
CA 92618

Irvine
tel 949.752.1612
fax 949.752.5321

Palm Springs
tel 760.323.5090

REGISTERED PROFESSIONAL ENGINEER
MEHDI HOSSEINZADEH
E 22037
ELECTRICAL
STATE OF CALIFORNIA

DATE SIGNED: 3/24/21

RESTRICTIVE NOTICE

THESE DESIGNS, DRAWINGS, AND SPECIFICATIONS ARE THE EXCLUSIVE PROPERTY OF GOUVIS ENGINEERING CONSULTING GROUP. THEY ARE THE SUBJECTOF COPYRIGHT AND OTHER LEGAL PROTECTION. THEY MAY BE USED ONLY BY THEIR INTENDED RECIPIENT AND ONLY FOR THE PROJECT DEPCTED HEREIN. NO PART OF THESE DRAWINGS ARE TO BE COPIED, TRANSFERRED, REPRODUCED, NOR CAN THEY BE USED, IN WHOLE OR IN PART, BY ANY OTHER PERSON OR FOR ANY OTHER PROJECT OR STRUCTURE, WITHOUT THE PRIOR EXPRESS WRITTEN CONSENT OF GOUVIS ENGINEERING CONSULTING GROUP

© 2017 GOUVIS ENGINEERING CONSULTING GROUP INC. - ALL RIGHTS RESERVED

PROJECT:
BORSTEIN RESIDENCE

NOT FOR BID OR CONSTRUCTION

DEVELOPER:

ARCHITECT:
Architeyk

LOCATION:
188 Homewood Road
Los Angeles
CA, 90049

REVISIONS

NO.	DATE	DESCRIPTION

SHEET NAME:
BASEMENT PLAN - POWER

PROJECT NUMBER:
65671

ENGINEER:

DRAFTER:

SHEET NUMBER:
E-2.3A

ISSUED DATE: 8/24/2020

NORTH

0 2' 4' 8' 12'
1/4 " = 1'-0"

SMOKE DETECTORS NOTES

1. SMOKE ALARMS AND SMOKE DETECTORS SHALL NOT BE LOCATED WHERE AMBIENT CONDITION, INCLUDING HUMIDITY AND TEMPERATURE, ARE OUTSIDE THE LIMITS SPECIFIED BY THE MANUFACTURER'S PUBLISHED INSTRUCTIONS.
2. SMOKE ALARMS OR SMOKE DETECTORS SHALL BE INSTALLED A MINIMUM OF 20 FOOT HORIZONTAL DISTANCE FROM A PERMANENTLY INSTALLED COOKING APPLIANCE, EXCEPTION IONIZATION SMOKE ALARMS OR PHOTOELECTRIC SMOKE ALARMS PER CODE.
3. INSTALLATION NEAR BATHROOMS. SMOKE ALARMS SHALL BE INSTALLED NOT LESS THAN A 3 FOOT HORIZONTAL DISTANCE FROM THE DOOR OR OPENING OF A BATHROOM THAT CONTAINS A BATHTUB OR SHOWER UNLESS THIS WOULD PREVENT PLACEMENT OF A SMOKE ALARM REQUIRED BY OTHER SECTION OF THE CODE.
4. SMOKE ALARMS AND SMOKE DETECTORS SHALL NOT BE INSTALLED WITH A 36 INCH HORIZONTAL PATH FROM THE SUPPLY REGISTERS OF A FORCED AIR HEATING OR COOLING SYSTEM AND SHLLE BE INSTALLED OUTSIDE OF THE DIRECT AIR FLOW FROM THOSE REGISTERS.
5. CARBON MONOXIDE/ SMOKE DETECTORS SHALL BE PERMANENTLY WIRED AND PROVIDED WITH BATTERY BACK-UP. SMOKE DETECTORS ARE TO BE INTERCONNECTED WITH-IN EACH UNIT SO THAT ALL DETECTORS WITH-IN THE UNIT WILL SOUND THEIR ALARMS ON ACTIVATION OF ANY DETECTOR IN THE UNIT.
6. WHERE THE HIGHEST POINT OF A CEILING IN A ROOM THAT OPENS TO THE HALLWAY SERVING THE BEDROOMS EXCEEDS THAT OF THE OPENING INTO THE HALLWAY BE 24 INCHES OR MORE, SMOKE DETECTORS SHALL BE INSTALLED IN THE HALLWAY AND IN THE ADJACENT ROOM WITHIN 12 INCHES FROM THE HIGHEST POINT OF THE CEILING.
7. CARBON MONOXIDE/ SMOKE DETECTORS INTERCONNECTED SHALL BE INSTALLED WITHIN EACH DWELLING UNIT BEFORE APPROVAL BY THE FIRE DEPARTMENT.

GENERAL NOTES

1. PROVIDE VACANCY SENSOR/DIMMER TO ALL LUMINAIRES REQUIRED BY SECTION 150.0 OF 2019 TITLE 24 PART 6.
2. THIS DRAWING IS FOR REFERENCE ONLY. WIRE CKT 20 ON THE PLAN TO ALL DETECTORS FOR A COMPLETE AND OPERATIONAL SYSTEM. VERIFY W/LOCAL JURISDICTION FOR ALARM DETECTOR REQUIREMENT BEFORE ROUGH-IN.
3. IN DWELLING AREA SPECIFIED IN CEC 2019 SECTION 210.52; (A) WALL SPACE, (B) SMALL-APPLIANCE CIRCUIT, (C) COUNTERTOP SPACE, (D) BATHROOM AREA, (E) OUTDOORS, (F) LAUNDRY AREA, (G) GARAGE, AND (H) HALLWAYS; ALL 125-VOLT, 15- AND 20- AMPERE RECEPTACLES SHALL BE LISTED TAMPER-RESISTANT RECEPTACLES.
4. OUTLETS INSTALLED IN KITCHENS, FAMILY ROOMS, LIVING ROOMS, PARLORS, LIBRARIES, DENS, BEDROOMS, SUNROOMS, RECREATION ROOMS, CLOSETS, HALLWAYS, LAUNDRY AREAS OR SIMILAR ROOMS OR AREAS WILL BE PROTECTED BY A LISTED ARC-FAULT CIRCUIT INTERRUPTER, COMBINATION-TYPE, INSTALLED TO PROVIDE PROTECTION OF THE BRANCH CIRCUIT.
5. ALL NEW CARBON MONOXIDE ALARM ARE 120V HARD-WIRED WITH BATTERY BACKUP; INTERCONNECTED WITH OC SENSOR, AND ARE AUDIBLE IN ALL SLEEPING ROOMS.
6. ELECTRICAL CONTRACTOR MUST VERIFY MECHANICAL EQUIPMENT INFORMATION FOR MECHANICAL DRAWING BEFORE ISSUING ANY BID. NOTIFY ENGINEER IMMEDIATELY IF ANY DISCREPANCY OCCUR.
7. THE HEIGHT OF THE OUTLETS AND SWITCHES ARE NOT NOTED ON THE LEGEND OR IN THE UNIT PLANS. REFER TO "TYPICAL ELECTRICAL DEVICE HEIGHT ON E-0.3"
8. ALL DWELLING UNIT LUMINAIRES SHALL BE HIGH EFFICACY IN ACCORDANCE WITH TABLE 150.0 OF 2019 BUILDING ENERGY EFFICIENCY STANDARDS, TITLE 24 PART 6.
9. ELECTRICAL VEHICLE SUPPLY EQUIPMENT (EVSE) IS REQUIRED IN NEW ONE- AND TWO-FAMILY DWELLINGS AND TOWNHOMES WITH ATTACHED GARAGES.
10. NEW GARAGES SHALL HAVE BATTERY BACK-UP INSTALLED FOR ANY GARAGE DOOR OPENERS. SB969.
12. PROVIDE A MINIMUM OF TWO 20-AMP SMALL APPLIANCE BRANCH CIRCUITS. THESE CIRCUITS SHALL SERVE ALL OUTLETS IN THE KITCHEN, PANTRY, BREAKFAST ROOM, DINING ROOM OR SIMILAR AREA OF THE DWELLING. THESE CIRCUIT SHALL HAVE NO OTHER OUTLETS EXCEPT IN THE PANTRY, BREAKFAST ROOM, DINING ROOM OR SIMILAR AREA OF THE DWELLING. THIS CIRCUIT MAY SERVE A WALL SWITCH CONTROLLED RECEPTACLE PROVIDED IN LIEU OF LIGHTING OUTLET.
13. PROVIDE A MINIMUM 20-AMP CIRCUIT FOR EACH OF THE FOLLOWING FASTENED IN PLACE APPLIANCES, DISHWASHER, TRASH COMPACTOR AND MICROWAVE OVEN.
14. PROVIDE A MINIMUM 15-AMP REFRIDGERATION EQUIPMENT BRANCH CIRCUIT. THIS CIRCUIT SHALL HAVE NO OTHER OUTLETS.
15. PROVIE A 20-AMP LAUNDRY BRANCH CIRCUIT. THIS CIRCUIT MAY SERVCE ONE ADDITIONAL OUTLET IN THE LAUNDRY AREA.
16. PROVIDE A MINIMUM 20-AMP BATHROOM BRANCH CIRCUIT. THIS CIRCUIT MAY SERVE MORE THAN ONE BATHROOM, HOWEVER MAY NOT HAVE OTHER OUTLETS.
17. THE MAXIMUM NUMBER OF OUTLETS ON A 15-AMPERE, 125-VOLT LUMINAIRE CIRCUIT SHALL BE TWELVE (12) AND SHALL NOT CONTAIN GENERAL-PURPOSE OUTLETS. SMOKE DETECTOR OUTLETS NEED NOT BE COUNTED. IC RATED RECESSED LUMINAIRES AND LOW WATTAGE ENERGY EFFICIENT LUMINAIRES MAY USE ARTICLE 220.14(D) FOR COMPUTING MAXIMUM NUMBER OF LUMINAIRES.
18. ALL LUMINAIRES (FIXTURE) INSTALLED IN DAMP LOCATIONS SHALL BE MARKED SUITABLE FOR WET LOCATIONS OR SUITABLE FOR DAMP LOCATIONS. (NEC 410.10(A))

KEYED NOTES

1. CEILING FAN OR LIGHTING FIXTURE TO BE DETERMINED. VERIFY W/ OWNER FOR ACTUAL TO LOCATION. OUTLET BOX/SYSTEMS SHALL BE LISTED AND MARKED BY THE OEM AS SUITABLE FOR THIS PURPOSE. CEILING -SUSPENDED (PADDLE) FANS SHALL NOT WEIGH MORE THAN 70 LBS. FOR OUTLET BOX/SYSTEMS DESIGNED TO SUPPORT CEILING-SUSPENDED FANS THAT WEIGH MORE THAN 35 LBS, THE REQUIRED MARKING SHALL INCLUDE THE MAXIMUM WEIGHT TO BE SUPPORTED.
2. DENOTES THE CONTROL FOR THE CEILING FAN CONNECTED TO THE J-BOX PER NOTE #1. VERIFY W/ SUPPLIER AND PROVIDE DIMMER CONTROL IF THE LIGHTS ARE INCANDESCENT.
3. DENOTES HALF-HOT RECEPTACLE ON SWITCH LEG 'b' IN THIS AREA.
4. SPLIT CIRCUITED HALF-SWITCHED DUPLEX RECEPTACLE FOR GARBAGE DISPOSER AND DISHWASHER BELOW KITCHEN SINK. CONNECT THE SWITCHED SIDE OF THE RECEPTACLE TO A MOTOR RATED WALL SWITCH AND PROVIDE A DEDICATED CIRCUIT FOR EACH APPLIANCE WITH A COMMON TRIP DEVICE AT THE CIRCUIT BREAKER.
5. DENOTES APPROXIMATE LOCATION OF FC/FAU UNIT. VERIFY WITH MECHANICAL DRAWINGS FOR EXACT LOCATION.
6. REFRIGERATOR RECEPTACLE CONNECTED TO LINE SIDE OF KITCHEN SMALL APPLIANCE GFI PROTECTED COUNTER MOUNTED RECEPTACLE TO COMPLY WITH NEC SECTION 210.52(B)(1).
7. PROVIDE 15A/1P MOTOR RATED SWITCH FOR CONNECT TO THE EXHAUST FAN. REFER TO MECHANICAL PLAN FOR DETAIL.
8. PROVIDE GFCI PROTECTED RECEPTACLE OUTLET WITH ENCLOSURE THAT IS WEATHERPROOF (WP) WHETHER OR NOT THE ATTACHMENT PLUG CAP IS INSERTED. AN OUTLET BOX HOOD SHALL BE LISTED AND SHALL BE IDENTIFIED AS "EXTRA DUTY". RECEPTACLE SHALL BE LISTED AND SO IDENTIFIED AS WEATHER-RESISTANT (WR) TYPE.
9. PER SECTION 150.0(K)(3) ALL OUTDOOR LIGHTING SHALL BE HIGH EFFICACY AND CONTROLLED BY MANUAL ON/OFF SWITCH AND ONE OF THE CHOICES BELOW:
   1. PHOTOCELL AND MOTION CENSOR
   2. PHOTOCELL AND AUTOMATIC TIME SWITCH
   3. ASTRONOMIC TIME CLOCK
10. DENOTES APPROXIMATE LOCATION OF RECEPTACLE FOR CAR CHARGER. PROVIDE PRE-WIRING FOR ELECTRIC CARS (1" CO TO UNIT PANEL FOR FUTURE EVCS). VERIFY IN FIELD FOR EXACT LOCATION AND MANUFACTURER'S SPECIFICATION BEFORE ROUGH IN.
11. DENOTES GARAGE DOOR OPENER CONTROLLER.
12. DENOTES CEILING MOUNTED RECEPTACLES FOR GARAGE DOOR OPENER ON THE SWITCH LEG AS SHOWN.
13. PROVIDE POWER, LIGHTING, AND OCCUPANCY SENSOR TO ATTIC SPACE.
14. CHIME UNIT WITH INTERGRAL TRANSFORMER MOUNTED AT +7'-0" A.F.F. TO BOTTOM OF CHIME.
15. PROVIDE 15A/2P MOTOR RATED SWITCH FOR CONNECTION TO THE FC.
16. DINING RECEPTACLE CONNECTED TO LINE SIDE OF KITCHEN SMALL APPLIANCE GFI PROTECTED COUNTER MOUNTED RECEPTACLE TO COMPLY WITH NEC SECTION 210.52(B)(1).
17. PROVIDE PLUG-CONNECTED MOTOR WITH MAIN SWITCH, BACKUP FUSE AND ADDITIONAL PROTECTION FOR PUMP.
18. BUFFER TANK PROVIDES OPTION FOR (2) 3KW HEATERS.

LOW VOLTAGE KEYED NOTES

- TV (CATV). PROVIDE OUTLET (1) RG6 & (1) CAT5. RUN CABLE TO THE CATV BOX AND RUN CAT5 CABLE TO THE APPROPRIATE DESTINATION. VERIFY WITH TV SERVICE PROVIDER AND IT CONSULTANT BEFORE ROUGH-IN.
- COMBINATION PHONE AND DATA. PROVIDE (1) CAT 6 CABLE PHONE AND (1) CAT6 CABLE FOR DATA BACK TO STRUCTURED MEDIA ENCLOSURE. PROVIDE 2-PORT COVER PLATE MOUNTED WITHIN 2-FEET OF 120V RECEPTACLE.
- PHONE. PROVIDE (1) CAT 6 CABLE PHONE BACK TO STRUCTURED MEDIA ENCLOSURE. PROVIDE 1-PORT COVER PLATE MOUNTED +42" AFF.
- DATA. PROVIDE (1) CAT 6 CABLE BACK TO STRUCTURED MEDIA ENCLOSURE. PROVIDE 1-PORT COVER PLATE MOUNTED 2-FEET OF 120V RECEPTACLE.
- STRUCTURED MEDIA ENCLOSURE. COORDINATE WITH LOW VOLTAGE CONTRACTOR. PROVIDE DUPLEX RECEPTACLE OUTLET INSIDE ENCLOSURE, SURGE PROTECTED 15 AMP I.E. LEGRAND 5362WSP OR LEVITON 47605-ACS. IN-BOUND SERVICES SHALL TERMINATE IN THIS ENCLOSURE AND INDIVIDUAL CONNECTIONS SHALL BE PROVIDED TO TELEVISION, DATA AND TELEPHONE DEVICES. PROVIDE CONDUIT RUN FROM THE STRUCTURED ENCLOSURE TO THE TELEPHONE AND CABLE COMPANY "POC".

FLOOR PLAN - ELECTRICAL LIGHTING | 1

GOUVIS engineering consulting group, inc.
15 Studebaker
Irvine
CA 92618

Irvine
tel 949.752.1612
fax 949.752.5321

Palm Springs
tel 760.323.5090

REGISTERED PROFESSIONAL ENGINEER
MEHDI HOSSEINZADEH
E 22037
ELECTRICAL
STATE OF CALIFORNIA

DATE SIGNED: 3/24/21

RESTRICTIVE NOTICE

THESE DESIGNS, DRAWINGS, AND SPECIFICATIONS ARE THE EXCLUSIVE PROPERTY OF GOUVIS ENGINEERING CONSULTING GROUP. THEY ARE THE SUBJECTOF COPYRIGHT AND OTHER LEGAL PROTECTION. THEY MAY BE USED ONLY BY THEIR INTENDED RECIPIENT AND ONLY FOR THE PROJECT DEPCTED HEREIN. NO PART OF THESE DRAWINGS ARE TO BE COPIED, TRANSFERRED, REPRODUCED, NOR CAN THEY BE USED, IN WHOLE OR IN PART, BY ANY OTHER PERSON OR FOR ANY OTHER PROJECT OR STRUCTURE, WITHOUT THE PRIOR EXPRESS WRITTEN CONSENT OF GOUVIS ENGINEERING CONSULTING GROUP

© 2017 GOUVIS ENGINEERING CONSULTING GROUP INC. - ALL RIGHTS RESERVED

PROJECT:
BORSTEIN RESIDENCE

NOT FOR BID OR CONSTRUCTION

DEVELOPER:

ARCHITECT:
Architeyk

LOCATION:
188 Homewood Road
Los Angeles
CA, 90049

REVISIONS

NO.	DATE	DESCRIPTION

SHEET NAME:
BASEMENT PLAN - LIGHTING

PROJECT NUMBER:
65671

ENGINEER:

DRAFTER:

SHEET NUMBER:
E-2.3B

ISSUED DATE 8/24/2020