Digital Keypad Lock Project — Design Explanation and Analysis

Overview

This project implements a 4-digit keypad lock system using logic gates and a 4017 decade counter. The lock opens when the correct sequence is entered on a matrix keypad, and LEDs provide visual check of the progress. The system uses no microcontrollers, relying entirely on combinational and sequential logic.

Design Approach

To detect key presses reliably, the design drives only one row at a time using the 4017 counter outputs. Columns are pulled LOW through resistors at all times. When a key in the active row is pressed, the corresponding column line goes HIGH. By AND'ing the active row and column signals, the system uniquely identifies each key press without uncertainty. This is all driven by a 5v regulator built from a LM7805 to convert a 12V to a steady 5V DC output.

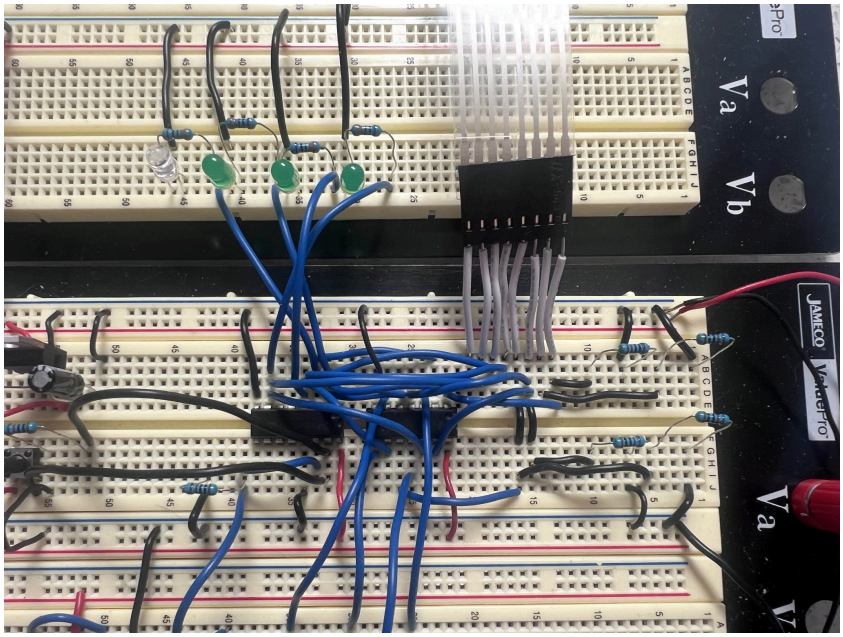

Keypad matrix driven by 4017 decade counter. Rows are scanned one at a time while columns are pulled LOW to detect key presses.

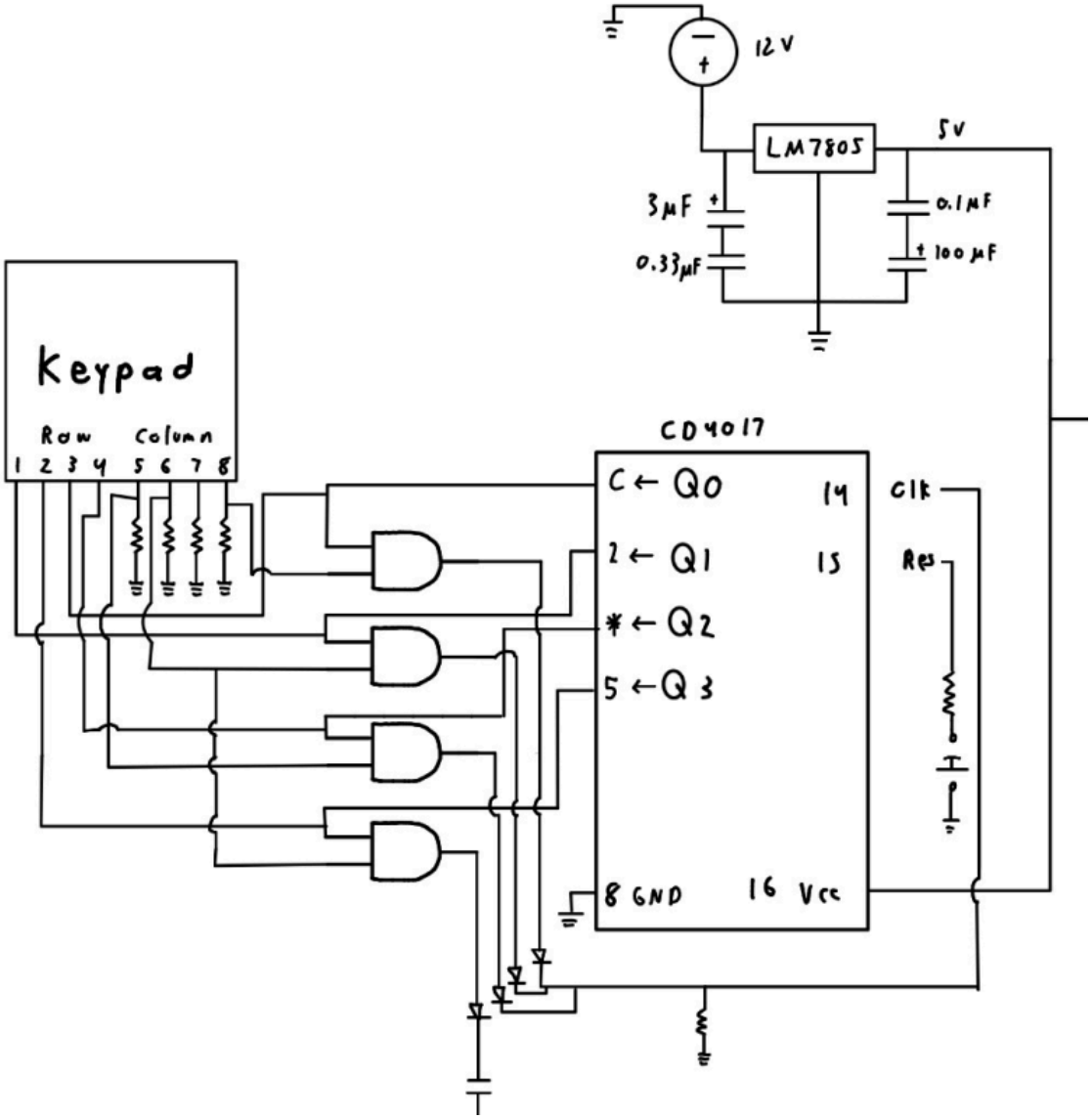

This method:

- Simplifies wiring and logic requirements

- Prevents ghosting and false key detections

- Minimizes the number of gates and components needed

- Makes debugging easier due to clear scanning behavior

Alternative Design Consideration

An alternative approach, which keeps all rows HIGH and all columns LOW, is more suitable for detecting incorrect key presses, but it depends more heavily on additional logic resources. Key presses then pull columns HIGH through the pressed switch. However, since all rows are always HIGH, the system cannot distinguish which row the key press belongs to by column signal alone.

To accurately detect keys with this setup, the logic must:

- AND the row and column signals to detect the specific key press
- After AND this result with a position signal from the 4017 counter to verify that the correct key is pressed at the correct step in the sequence

This design is more flexible for arbitrary codes, it requires more logic gates and more complex wiring, increasing hardware cost and debugging complexity.

Trade-offs

Choosing the single active row scanning method was a deliberate design decision balancing:

- Available hardware resources (limited gate ICs)
- Simplicity and reliability of the system
- Ease of testing and debugging

The alternative all rows HIGH design is more practical and enables features like wrong key detection, but it was less practical for this project due to limited available logic gates.

Conclusion

This project showcases a practical and resource-efficient keypad lock using discrete logic. By exploring keypad scanning techniques and evaluating design trade-offs, I was able to build a working and maintainable system. Considering the alternative design highlights a deeper

understanding of digital logic and provides a strong foundation for tackling more advanced circuits in the future.

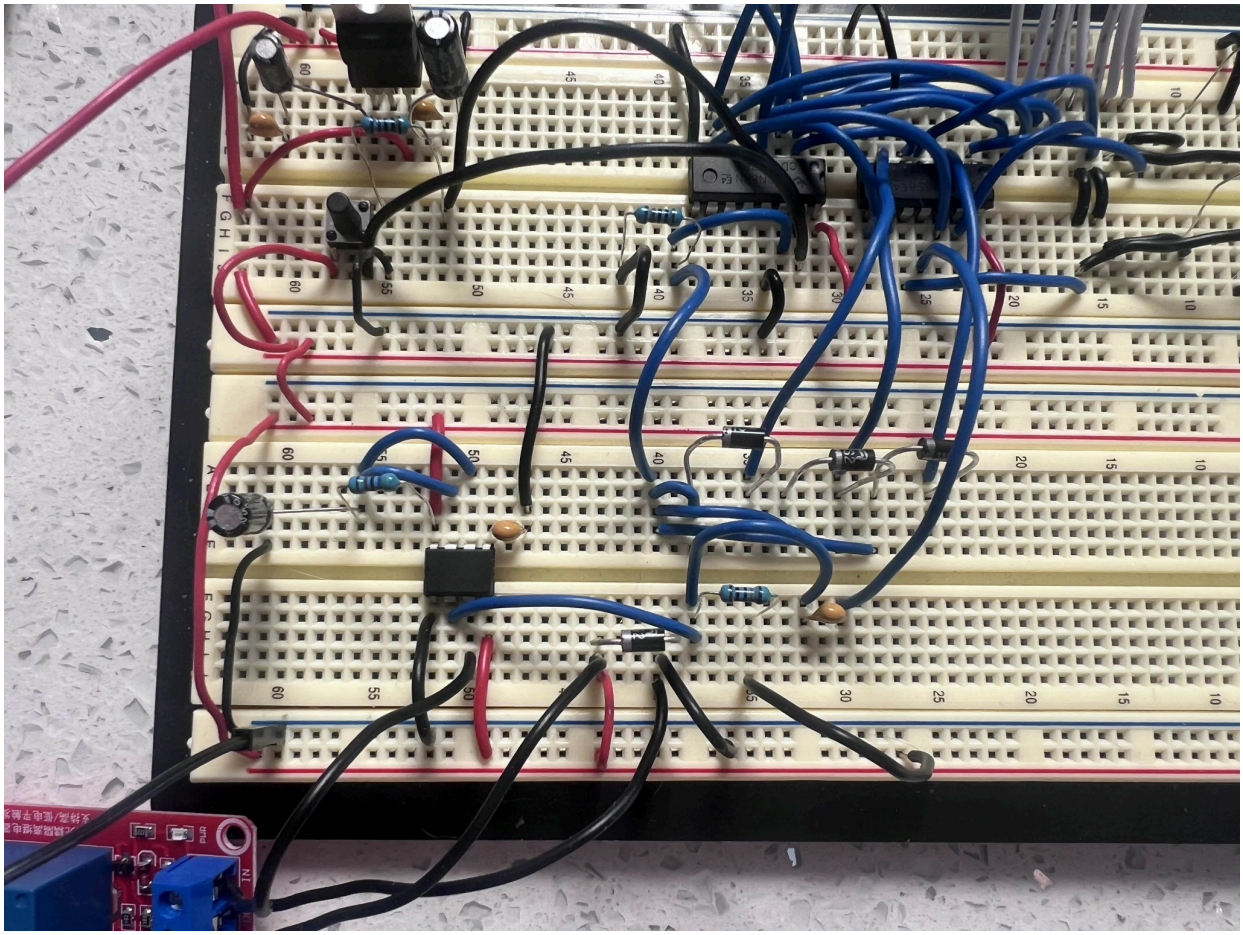

Timer circuit that controls output activation (e.g., LED or solenoid) after correct code entry. Ensures the lock stays open briefly before resetting.