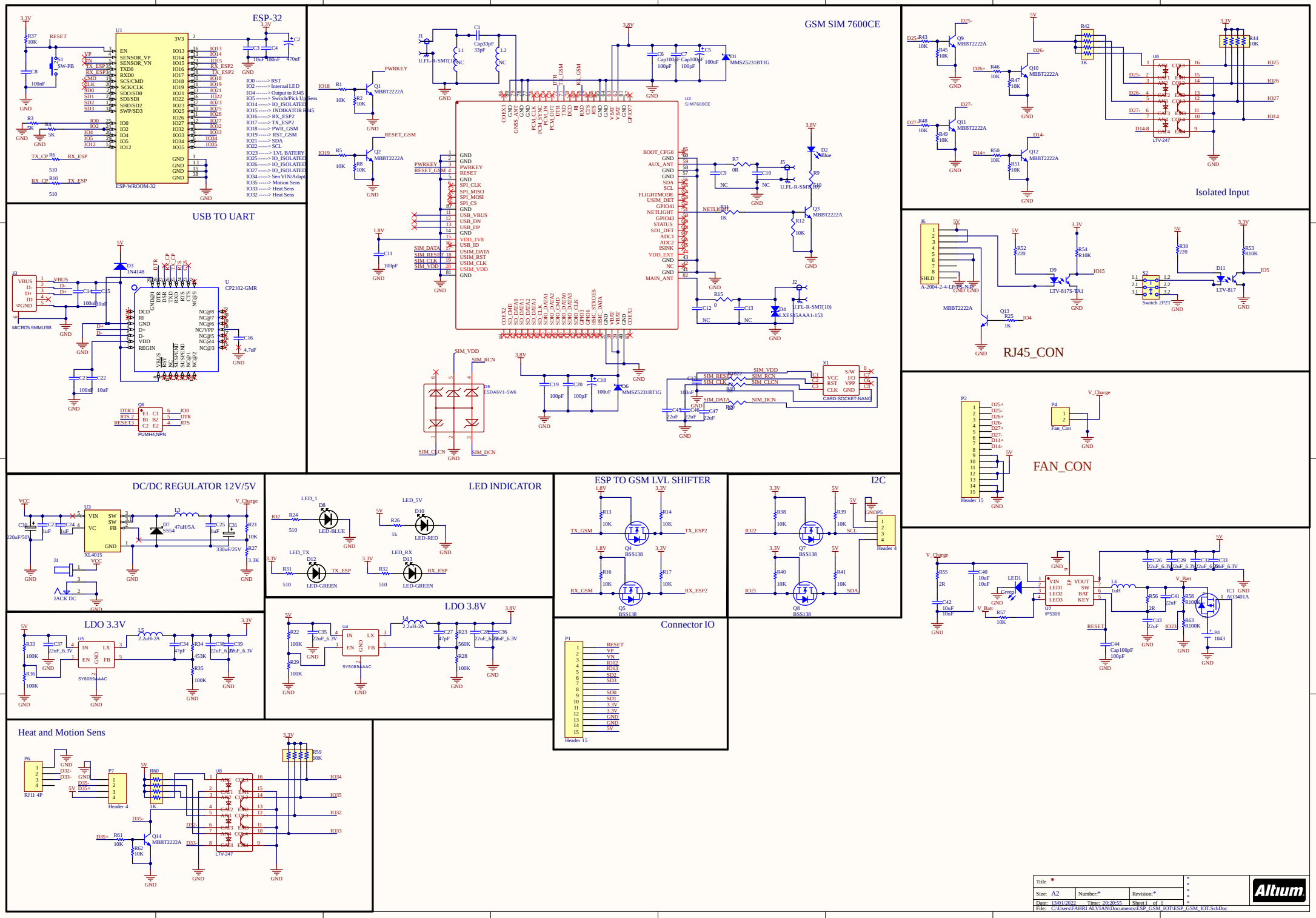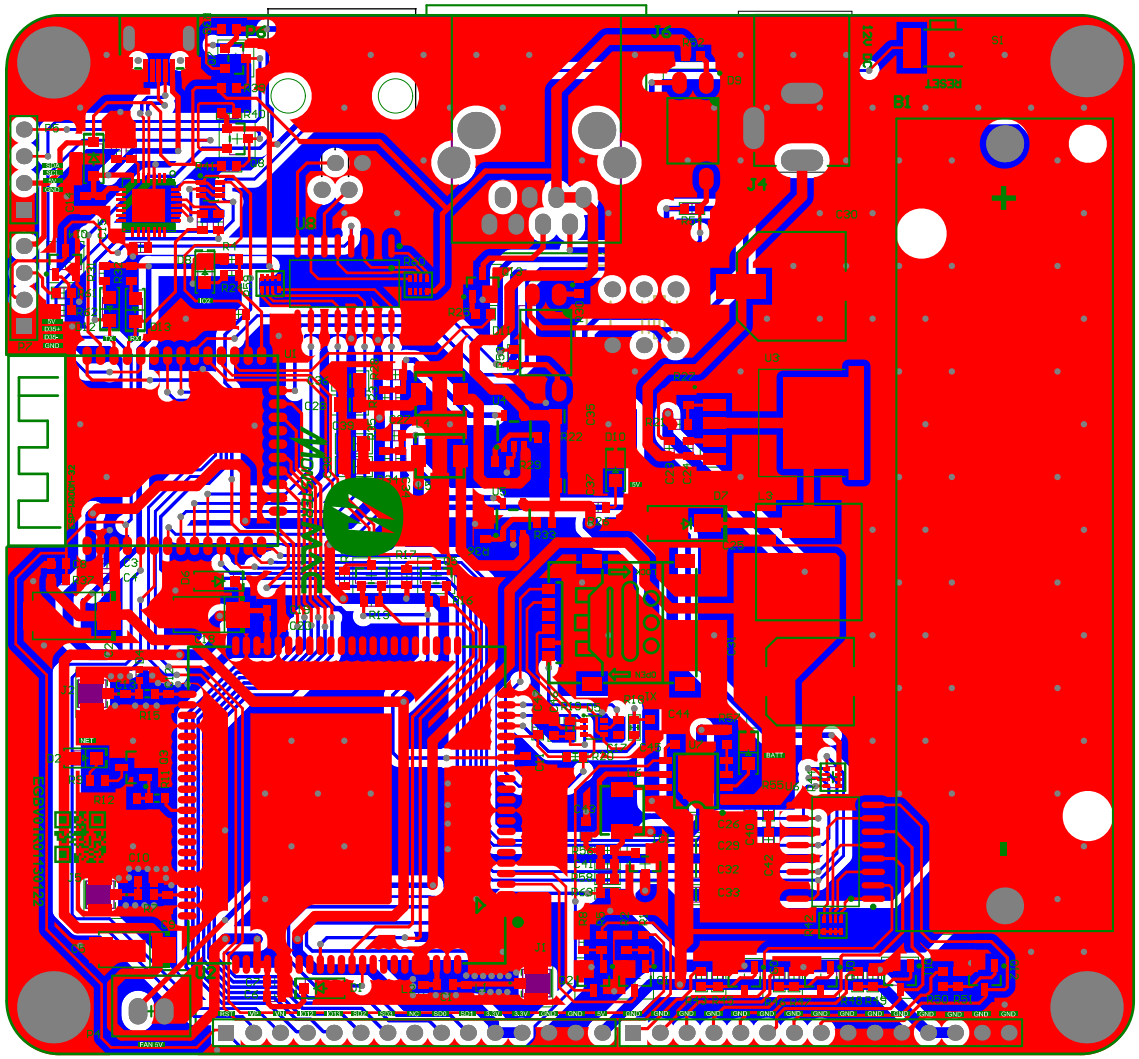
ESP-32
GSM SIM 7600CE
Isolated Input
USB TO UART
RJ45_CON
FAN_CON
DC/DC REGULATOR 12V/5V
LED INDICATOR
ESP TO GSM LVL SHIFTER
I2C
LDO 3.3V
LDO 3.8V
Connector IO
Heat and Motion Sens
Title *
Size: A2
Number:*
Revision:*
Date: 13/01/2022
Time: 20:20:55
Sheet 1 of 1
File: C:\Users\FAHRI ALVIAN\Documents\ESP_GSM_IOT\ESP_GSM_IOT.SchDoc
Altium