REWIND: An Immersive AR Surgical Training Tool

Victor Dunagan[1,2], Nathan Hammond[1,2], Nick Cui[1], Audrey Hardtke[1], Aaron Falconer[1,2]

[1]Department of Biomedical Engineering, Vanderbilt University, Nashville, TN

[2]Department of Electrical Engineering, Vanderbilt University, Nashville, TN

INTRODUCTION

- Surgical training relies on cadaver labs and learning in the OR, methods that are expensive, difficult to repeat, and don't always translate to real OR performance.
- AR/VR simulation offers a safe, repeatable, and scalable alternative to cadaveric simulations, especially for minimally invasive procedures
- Current AR simulators struggle to be adopted mainly due to the challenge of replicating compliant, deformable tissue behavior in real-time
- Haptic feedback addresses this problem through providing a way to replicate the "feel" of soft tissue, helping trainees develop their techniques, apply more appropriate forces, and retain their skills longer

Our solution: a closed-loop AR + haptic glove system that bridges this gap, combining joint-angle sensing, ROS-based haptic force feedback control, and Unity AR rendering to provide immersive, haptic-feedback reinforced surgical training.

PREVIOUS SOLUTIONS

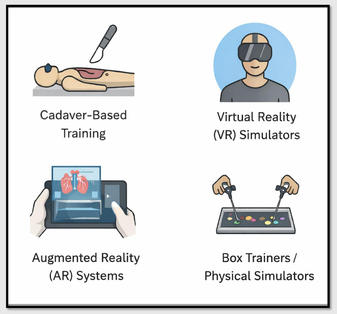

Cadaver-Based Training
- Gold standard for realism but limited by cost, availability, and repeatability ; No measurable performance feedback

Virtual Reality (VR) Simulators
- Immersive but lack physical interaction

Augmented Reality (AR) Systems
- Enhance visualization but lack closed-loop interaction and realistic force feedback

Box Trainers / Physical Simulators
- Common in minimally invasive surgery training; Hands-on practice but no real-time guidance

Gap in Existing Solutions

- Lack of integrated AR + full-hand haptics systems
- Limited performance evaluation and feedback within training systems
- Lack of realistic hands to follow along with in training environments
- Insufficient realism in soft tissue deformation + force interaction simultaneously

NEEDS

Current AR training tools lack accurate haptic feedback and repeatability, limiting skill development and prolonging surgical training time. Our solution integrates haptics, motion tracking and 3D scene reconstruction to simulate realistic surgical procedures

GENERAL PIPELINE & SCENE RECONSTRUCTION

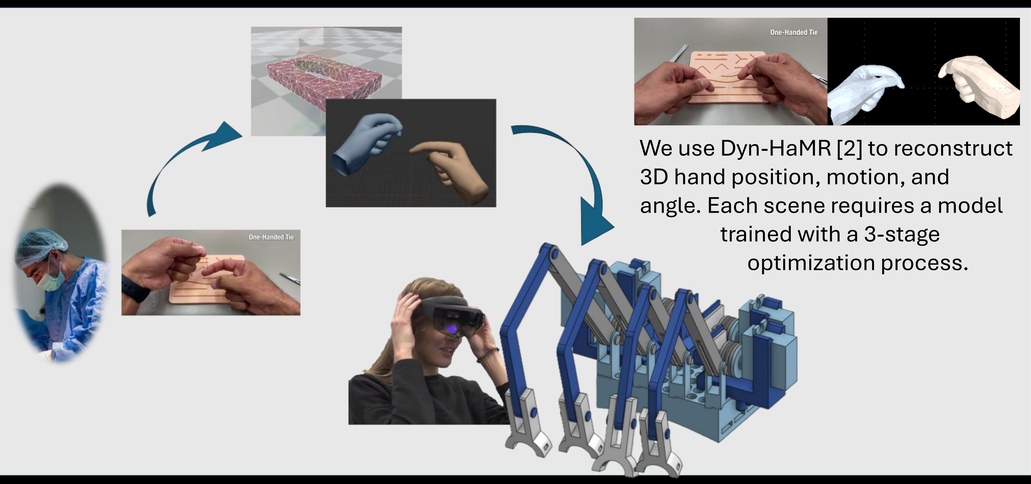

We use Dyn-HaMR [2] to reconstruct 3D hand position, motion, and angle. Each scene requires a model trained with a 3-stage optimization process.

MECHANICAL GLOVE DESIGN

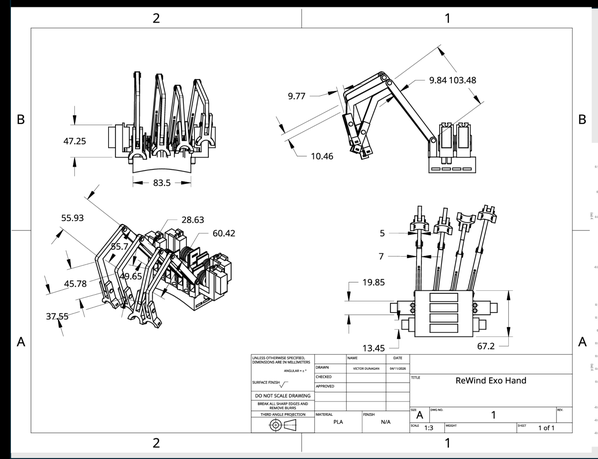

Range of Motion Optimization Plots

Range of motion plots were generated to display the baseline range of motion of the finger (red) versus the range of motion of the exohand linkages (blue). These plots were used to validate the preservation of normal hand motion for the fingers. Data was simulated for the index finger (top left), middle finger (top right), ring finger (bottom left, and the pinky (bottom right).

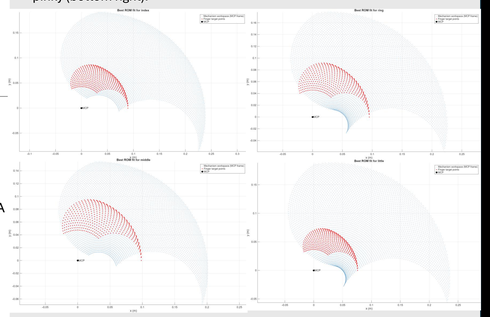

ELECTRONICS

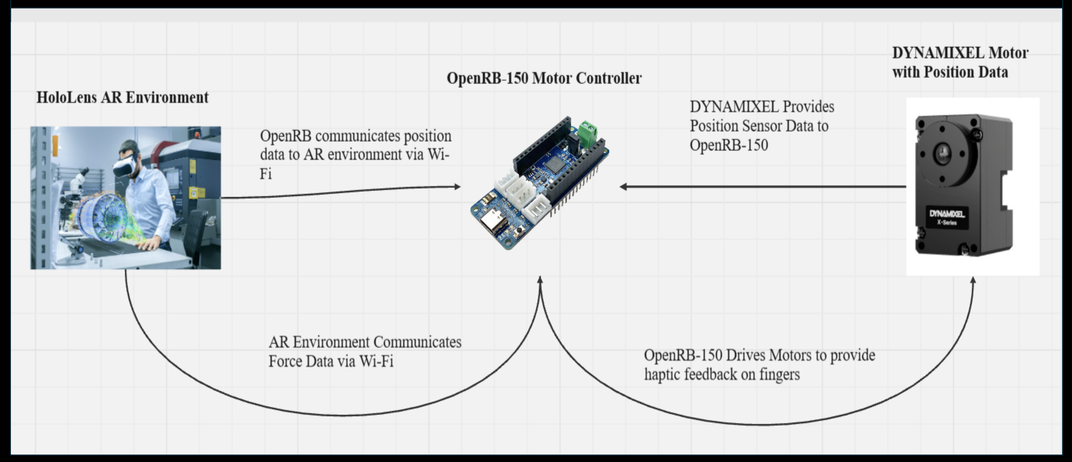

AUGMENTED REALITY

The Unity scene connects real-time instrument tracking with a physics-based suturing simulation. A PC vision pipeline streams 6-DoF instrument poses to Unity, where they are transformed and used to drive a virtual needle. This enables markerless tracking to directly control the simulated instrument in real time.

Within Unity, the physics engine simulates needle–tissue–thread interaction. A state machine governs insertion, while physics-based constraints drive tissue deformation, suture pull-through, and wound closure. This creates a closed-loop system where real-world motion produces realistic, physically accurate AR surgical behavior.

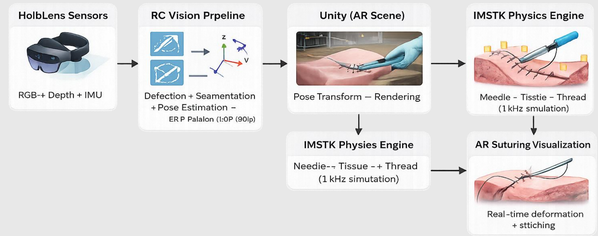

NEXT STEPS

- **Improve realism of haptic feedback** to better mimic soft tissue behavior
- **Reduce system latency** for smoother real-time interaction
- **Expand AR scenarios** to simulate full surgical procedures
- Integrate **more advanced tracking** and sensor fusion methods
- Conduct **user studies** to evaluate training outcomes and usability
- Transition toward a **more portable** and **scalable** system design

References/Acknowledgements

We would like to thank our mentors, Dr. Michael Goldfarb and Dr. Jie Ying Wu for their gracious help. Additionally, we would like to thank the Department of Biomedical Engineering, the SyBBURE Searle Undergraduate Research Program, and Dr. Marc Moore for access to various compute and hardware resources, funding, and additional help.

[1] M. Bergholz, M. Ferle, and B. M. Weber, "The benefits of haptic feedback in robot assisted surgery and their moderators: a meta-analysis," *Sci Rep*, vol. 13, no. 1, p. 19215, Nov. 2023, doi: 10.1038/s41598-023-46641-8.

[2] S. Mitani *et al.*, "Augmented reality-enhanced cadaver surgical training for head and neck surgeons: a proof-of-concept study," *Global Surgical Education - Journal of the Association for Surgical Education*, vol. 5, no. 1, Dec. 2025, doi: https://doi.org/10.1007/s44186-025-00420-3.

[3] Z. Yu, S. Zafeiriou, and T. Birdal, "Dyn-HaMR: Recovering 4D Interacting Hand Motion from a Dynamic Camera," arXiv.org. Accessed: Apr. 10, 2026. [Online]. Available: https://arxiv.org/abs/2412.12861v3