Building a "Poor-Man's" Amateur Radio Satellite Ground Station Part II: Inexpensive Manual/Computer-Controlled Rotator Controller

by Gordon Gibby KX4Z

Others have pointed out that you just "don't have enough hands" to adjust everything simultaneously as a satellite arcs overhead in a 3D orbit, with constantly changing Doppler effects as well. A really helpful improvement for my poor-man's satellite ground station efforts was developing computer-controlled aiming of my antenna system. There are commercially available options. These include a Yaesu G-232B controller box retailing upwards of $649.99 (https://www.dxengineering.com/parts/ysu-gs-232b) , and a really slick multi-function system by CSN Technologies for much less, $275. (See: https://www.dxengineering.com/parts/atn-sat-tracker) Many hobbyists have been successful using off-the-shelf commercial systems.

Much Cheaper HomeBrew System

However, Anthony Good K3NG many years ago wrote Arduino code to interface between freely-available satellite tracking software, and almost any manner of rotator, from commercial to any number of homebrew rotators. His somewhat confusing but highly advanced software handles one- or two-axis control and a vast array of potential motors and sensors.

When I considered using his well-developed software, I found good examples of others who had done so, but **no currently available printed circuit board to make this easier**. I dislike "bailing-wire" contraptions; I prefer to have a solid printed circuit board project if possible. So I enlarged his basic Arduino schematic to utilize a Nano (which requires careful choices of software due to its memory limitations), built-in manual push-buttons, and potential pulse-width modulation and control of off-the-shelf relay boards to reverse direction.

This resulted in Gerbers for an inexpensive interface board that turned out to be quite successful. The schematic and a photo of a working prototype board are presented below. The printed circuit design is an offshoot of earlier circuits I've built, and places the Nano and components on one side of the board, and uses the reverse side for the 2-line LCD display and user-interface buttons. This reduces the size and cost of the board.

This project has been "shared" on pcbway.com and can be accessed easily: https://www.pcbway.com/project/shareproject/K3NG_Rotator_Dual_Axis_Controller_Board_fd759cc2.html Zipped GERBER files suitable for submission to pcbway.com are also available at: https://www.nf4rc.club/how-to-docs/gerber-files-for-k3ng-rotator-printed-circuit-board/

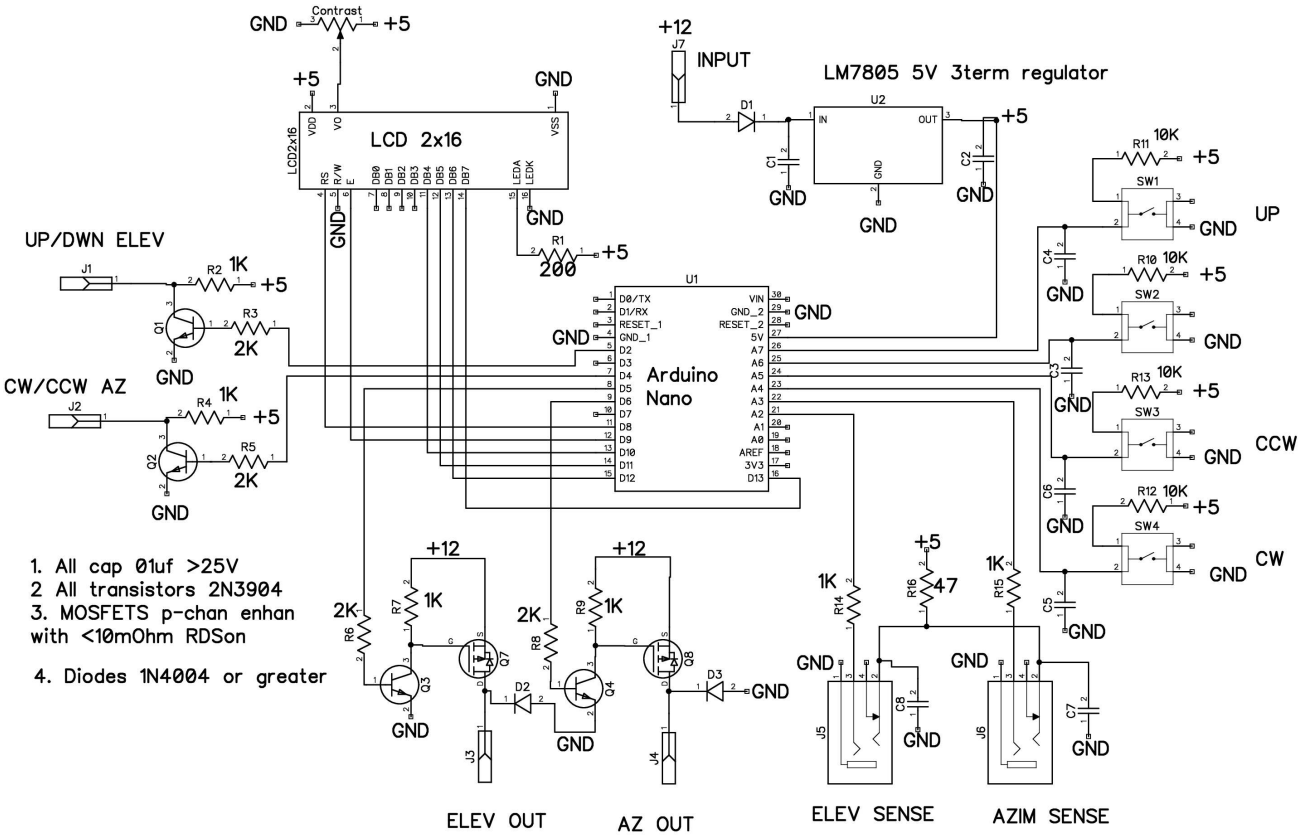

Figure 1: Schematic Diagram for the Rotator Controller

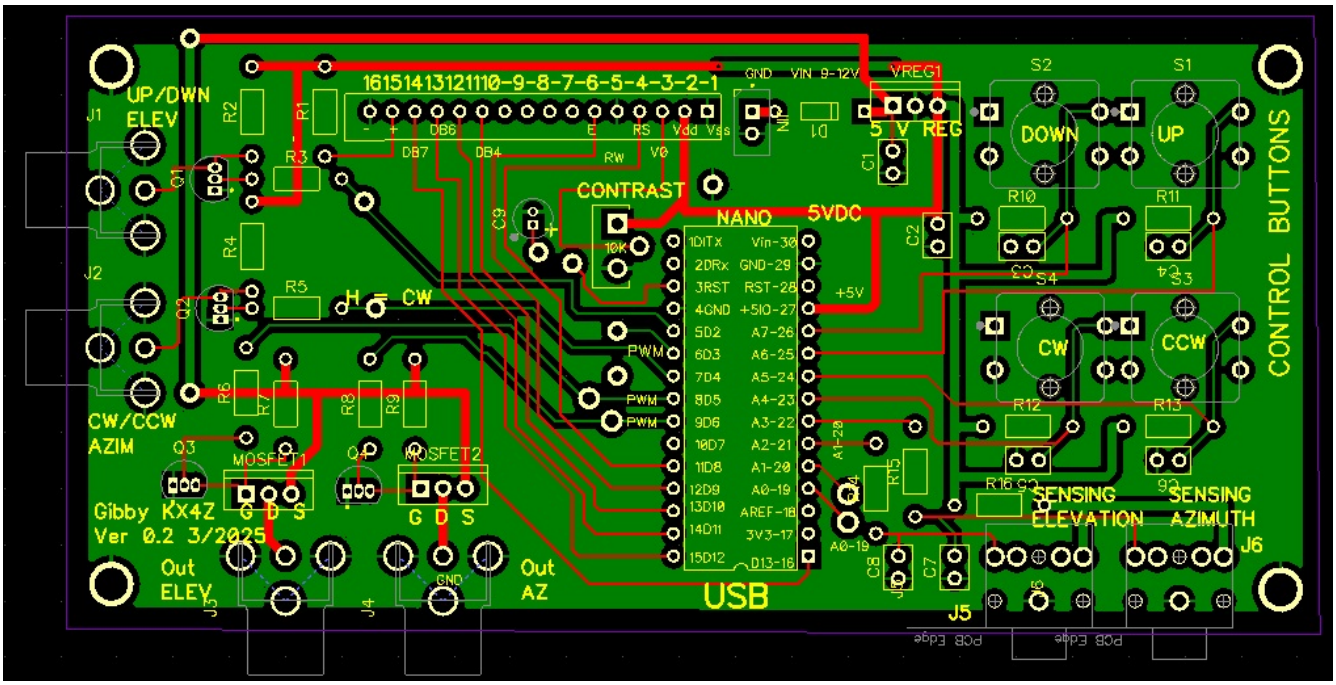

Figure 2: Screenshot of board (top traces RED, bottom traces GREEN) from DipTrace software.

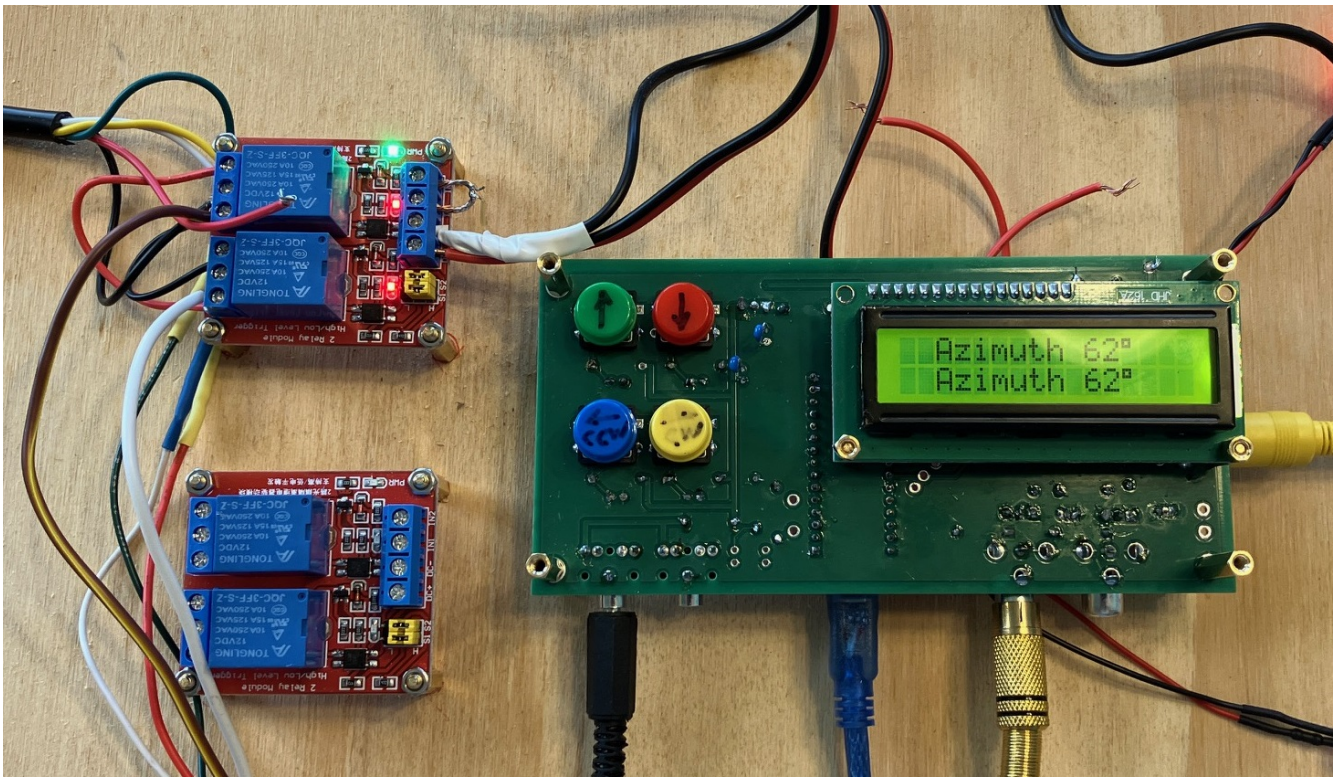

Figure 3: Photo of prototype build, on simple plywood. 4 buttons for up/down left/right are shown. The component side is downwards, where connectors are also mounted. The two orange wires are to connect a 10uF anti-erase capacitor which seems to be unnecessary. In this photo, the elevation inputs and outputs have not yet been added, so the controller displays only azimuth rotation.

SOFTWARE To Drive Board

With minor alterations to the basic K3NG software (available at: https://github.com/k3ng/k3ng_rotator_controller), this board works quite well, providing both manual and computer-controlled operation of one or two rotators. It can be used directly with Yaesu commercially available DC-motor rotators such as the G-450ADC. In fact it can simply replace the manual rotator that comes in such rotator packages, with the addition of a DC power supply.

The K3NG source code and alterations, settings will be discussed in a future article. The modified source code for my implementation will be provided in that article. A solution for 2-axis rotator control will also be provided in a subsequent article, as will information on homebrew antennas. This is truly a low-cost way to get into satellite communications!

BILL OF MATERIALS		
Designation	Specification	Notes
U1	Arduino Nano, 30-pin DIP package headers installed	

U2	LM7805 5V 3terminal 1A regulator	
D1, D2, D3	1N4004, 1N4005, 1N4006 or 1N4007 1-Amp silicon diode	
Q1, Q2, Q3, Q4	2N3904 NPN transistor (or any similar small signal transistor, hfe>50	
Q7, Q7	P channel enhancement MOSFET, Vds >=50V, Rdson <=10milli-ohm	
C1, C2, C3, C4, C5, D6, C7	0.1 uF ceramic capacitor, 50V or higher.	0.01uF may also be used.
R1	200 ohms, 1/4W	Sets the brightness of the LED back light of the LCD display
Contrast	10K trimmer potentiometer, 1/4 watt	
R2,R4, R7, R9, R14, R15	1K 1/4 watt resistor	
R3, R5, R6, R8	2K 1/4 watt resistor	
R10, R11, R12, R13	10K 1/4 watt resistor	pull up resistors for manual buttons
R16	47 ohm 1/4W resistor	Serves as a current limit and "fuse" for the potentiometer sensing system as a protection against short circuits
External relay board	2 SPDT relays, each independently controllable by 0/5V logic voltages	Both relays on each board are driven in sync so that the + and - leads to the DC rotator motor can be reverse in polarity to reverse direction. The board relays are powered by 12V (same as the rotators) while their logic inputs are optically isolated and controlled by 0V/5V logic LOW/HI inputs (very convenient for the Arduino Nano outputs). (If necessary these could be used to make proper connections to reverse direction of an AC motor) https://www.amazon.com/dp/B085N49S79?ref_=ppx_hzsearch_conn_dt_b_fed_asin_title_1&th=1