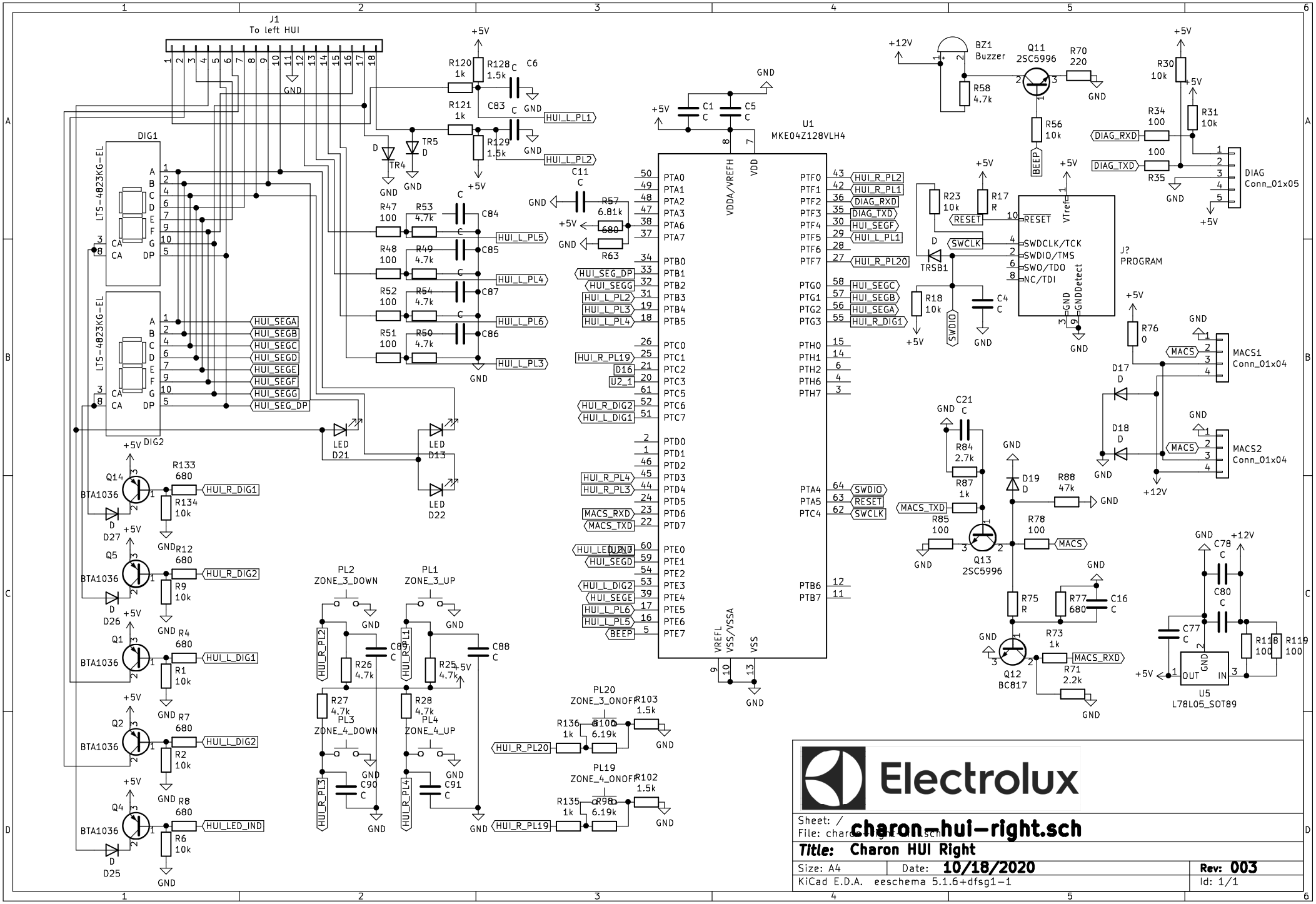
J1
To left HUI
DIG1
LTS-4823KG-EL
DIG2
U1
MKE04Z128VLH4
J?
PROGRAM
SWDCLK/TCK
SWDIO/TMS
SWO/TDO
NC/TDI
VTref
RESET
GNDDetect
BZ1
Buzzer
Q11
2SC5996
Q13
2SC5996
Q12
BC817
U5
L78L05_SOT89
DIAG
Conn_01x05
MACS1
Conn_01x04
MACS2
Conn_01x04
PL1
ZONE_3_UP
PL2
ZONE_3_DOWN
PL3
ZONE_4_DOWN
PL4
ZONE_4_UP
PL20
ZONE_3_ONOFF
PL19
ZONE_4_ONOFF
Electrolux
Sheet: /
File: charon-hui-right.sch
Title: Charon HUI Right
Size: A4
Date: 10/18/2020
Rev: 003
KiCad E.D.A. eeschema 5.1.6+dfsg1-1
Id: 1/1