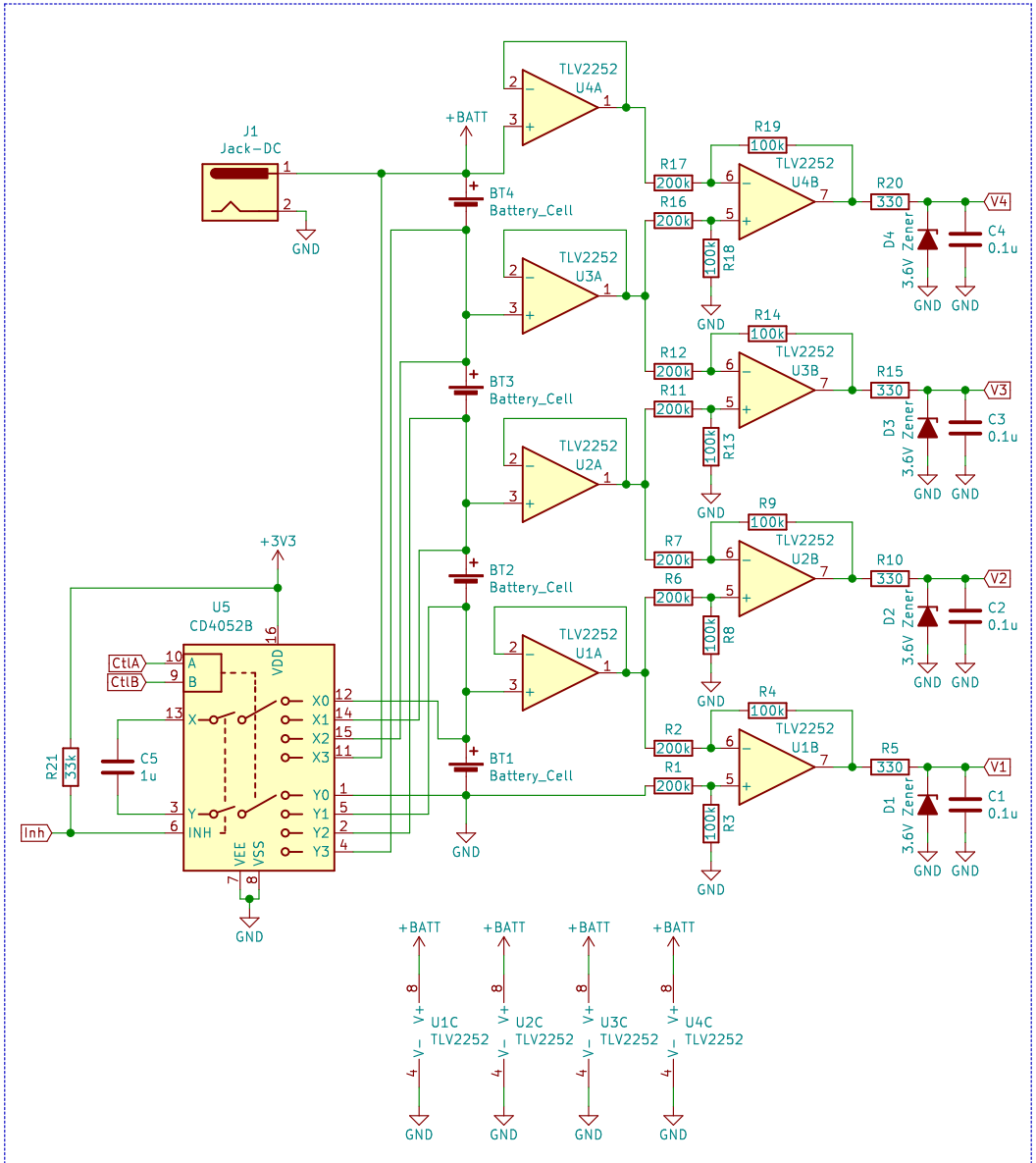

Battery balancing and monitoring circuit

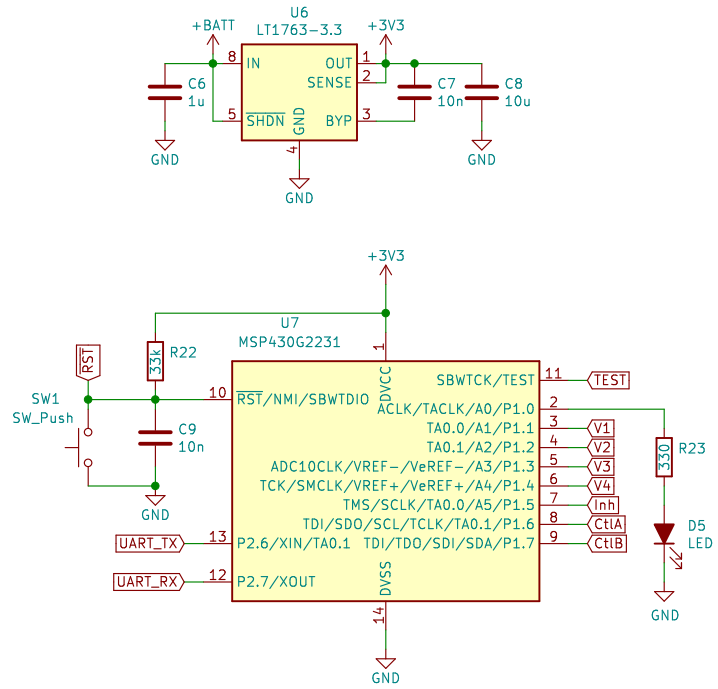

Battery control system circuit

4s1p rechargeable battery with auto-balancing and state reporting

K7ARX

Sheet: /

File: Avionics Battery Prototype.sch

Title: Avionics Battery Prototype

Size: USLetter	Date: 2021-03-05	Rev: A
KiCad E.D.A. kicad (5.1.9)-1		Id: 1/1