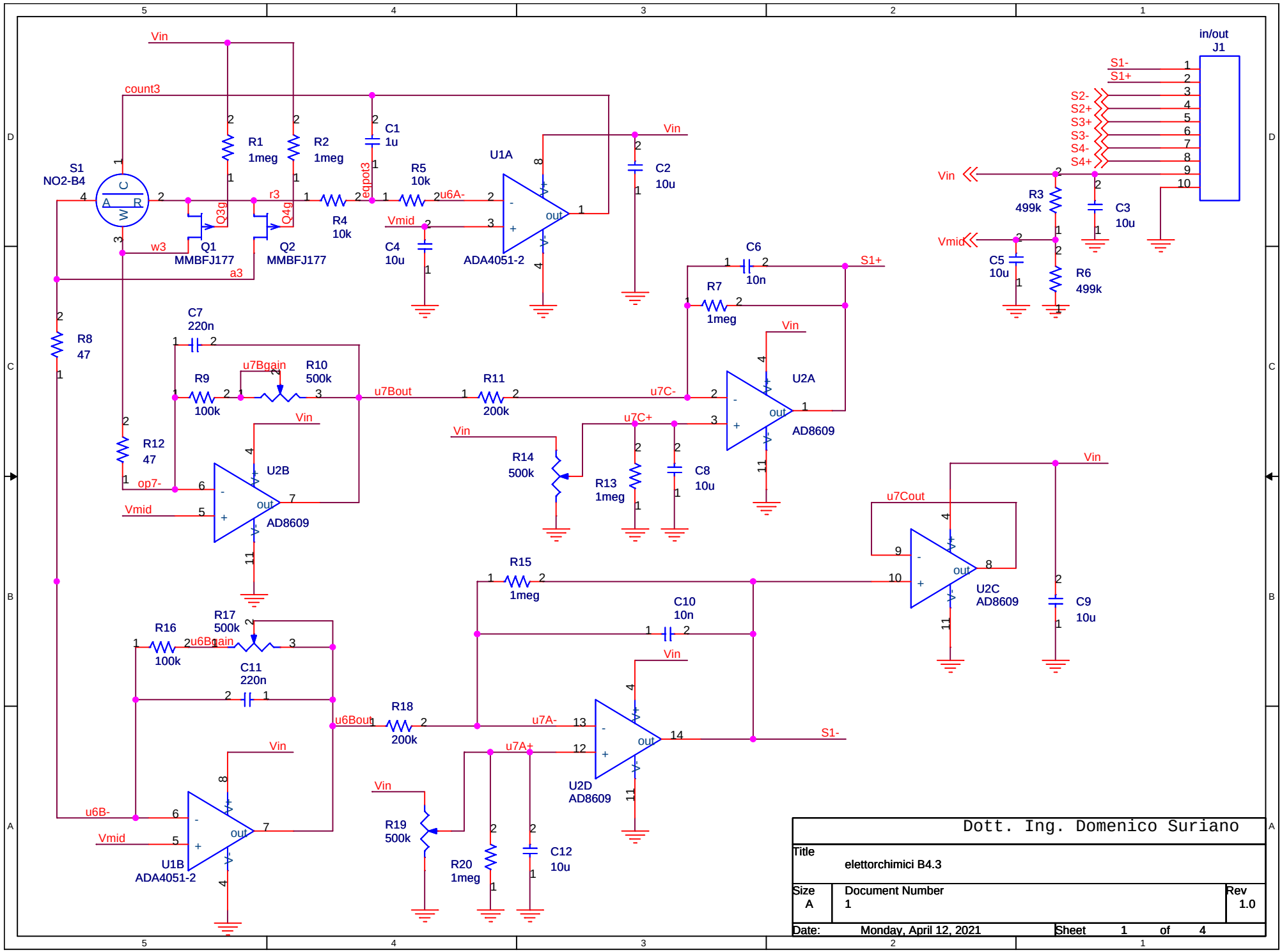

Dott. Ing. Domenico Suriano

Title	elettorchimici B4.3	
Size A	Document Number 1	Rev 1.0
Date: Monday, April 12, 2021	Sheet 1 of 4	