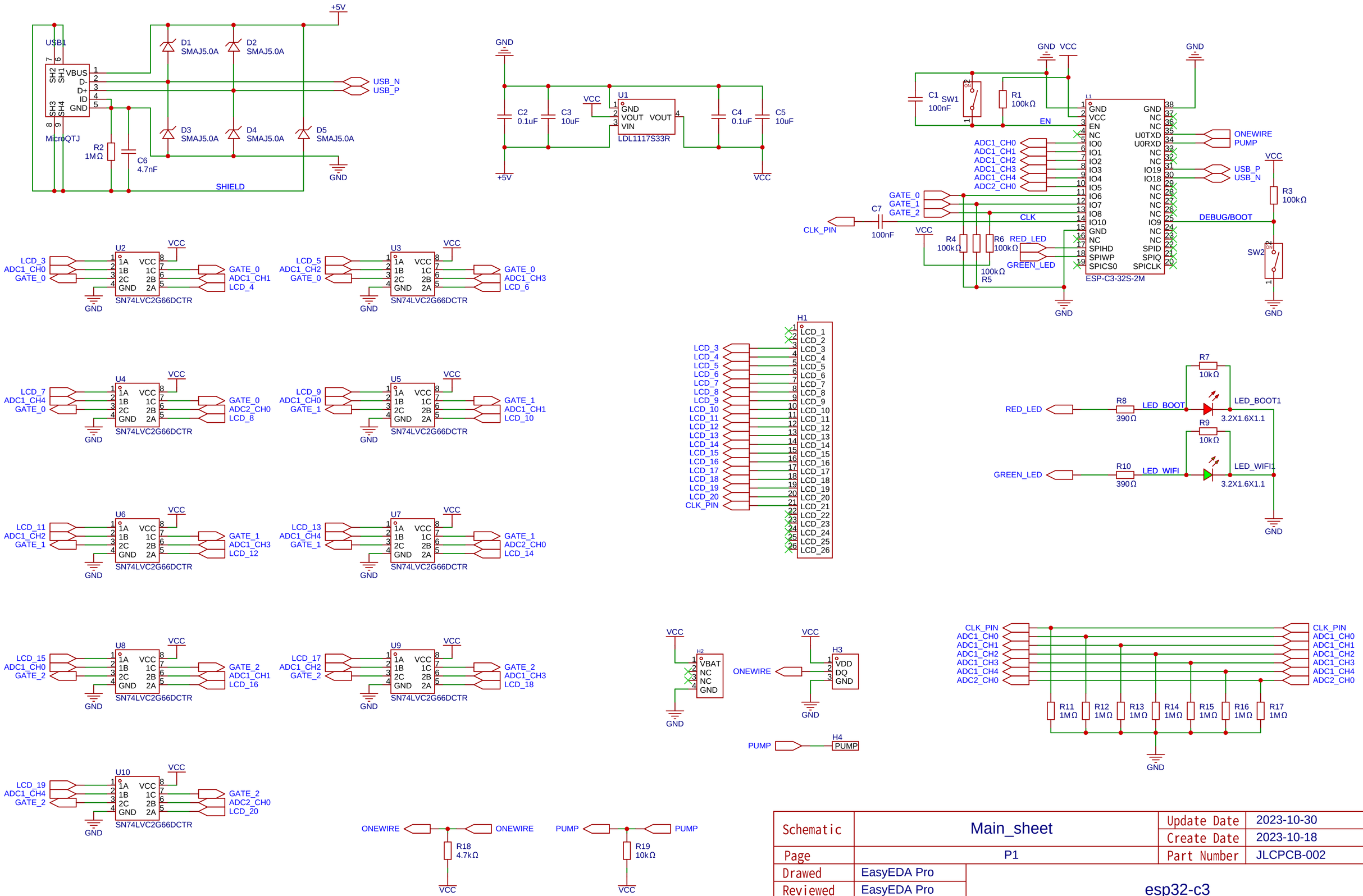

Schematic	Main_sheet	Update Date	2023-10-30
		Create Date	2023-10-18
Page	P1	Part Number	JLCPCB-002
Drawed	EasyEDA Pro	esp32-c3	
Reviewed	EasyEDA Pro		
		VER	SIZE	PAGE 1 OF 1
EasyEDA		V0.1	A3	EasyEDA.com