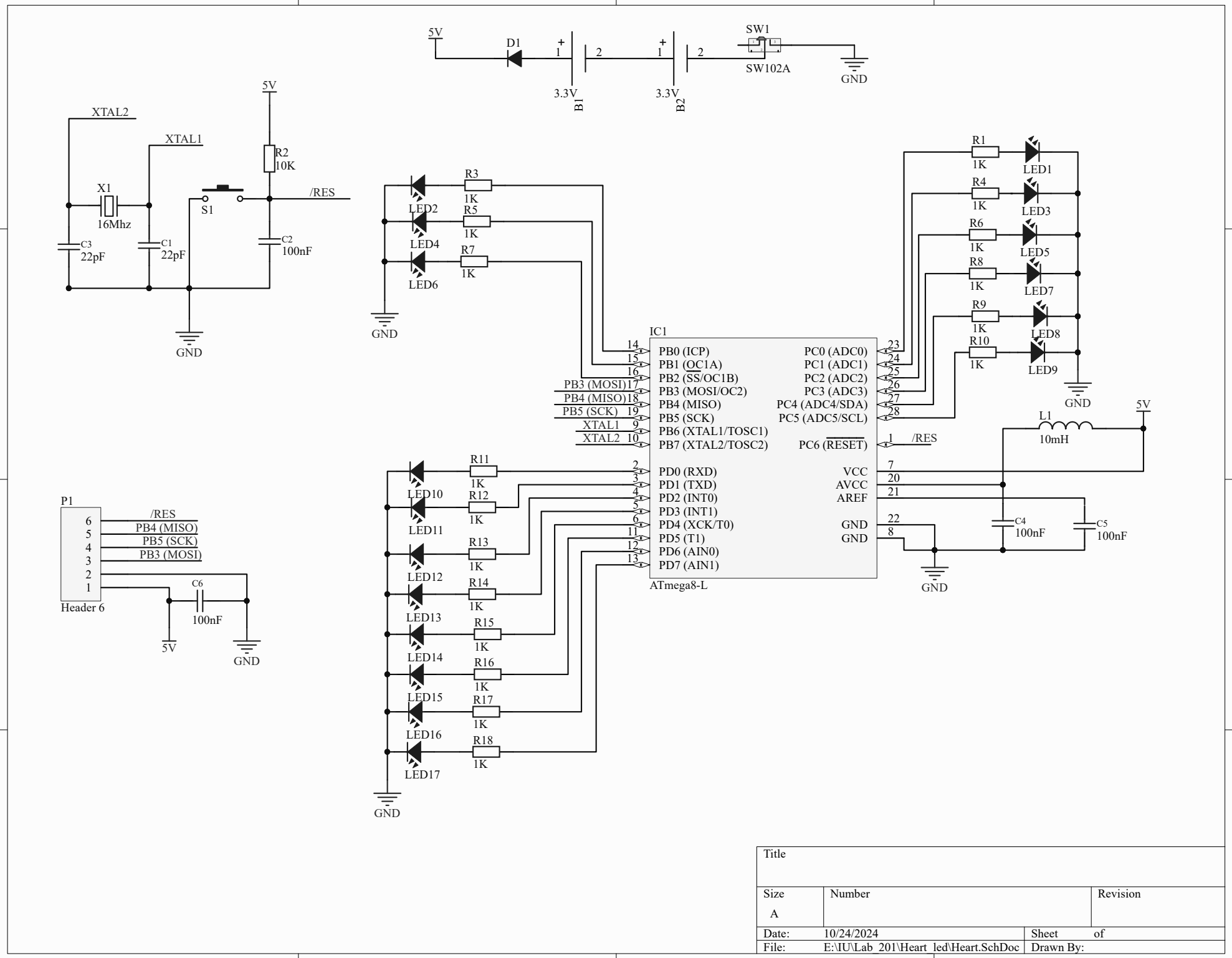
5V
D1
3.3V
B1
3.3V
B2
SW1
SW102A
GND
XTAL2
XTAL1
X1
16Mhz
C3
22pF
C1
22pF
S1
R2
10K
/RES
C2
100nF
GND
R3
1K
LED2
R5
1K
LED4
R7
1K
LED6
GND
IC1
PB0 (ICP)
PB1 (OC1A)
PB2 (SS/OC1B)
PB3 (MOSI/OC2)
PB4 (MISO)
PB5 (SCK)
PB6 (XTAL1/TOSC1)
PB7 (XTAL2/TOSC2)
PD0 (RXD)
PD1 (TXD)
PD2 (INT0)
PD3 (INT1)
PD4 (XCK/T0)
PD5 (T1)
PD6 (AIN0)
PD7 (AIN1)
PC0 (ADC0)
PC1 (ADC1)
PC2 (ADC2)
PC3 (ADC3)
PC4 (ADC4/SDA)
PC5 (ADC5/SCL)
PC6 (RESET)
VCC
AVCC
AREF
GND
GND
ATmega8-L
PB3 (MOSI)
PB4 (MISO)
PB5 (SCK)
XTAL1
XTAL2
/RES
R1
1K
LED1
R4
1K
LED3
R6
1K
LED5
R8
1K
LED7
R9
1K
LED8
R10
1K
LED9
GND
L1
10mH
5V
C4
100nF
C5
100nF
GND
P1
Header 6
/RES
PB4 (MISO)
PB5 (SCK)
PB3 (MOSI)
C6
100nF
5V
GND
R11
1K
LED10
R12
1K
LED11
R13
1K
LED12
R14
1K
LED13
R15
1K
LED14
R16
1K
LED15
R17
1K
LED16
R18
1K
LED17
GND
Title
Size
A
Number
Revision
Date: 10/24/2024
Sheet of
File: E:\IU\Lab_201\Heart_led\Heart.SchDoc
Drawn By: