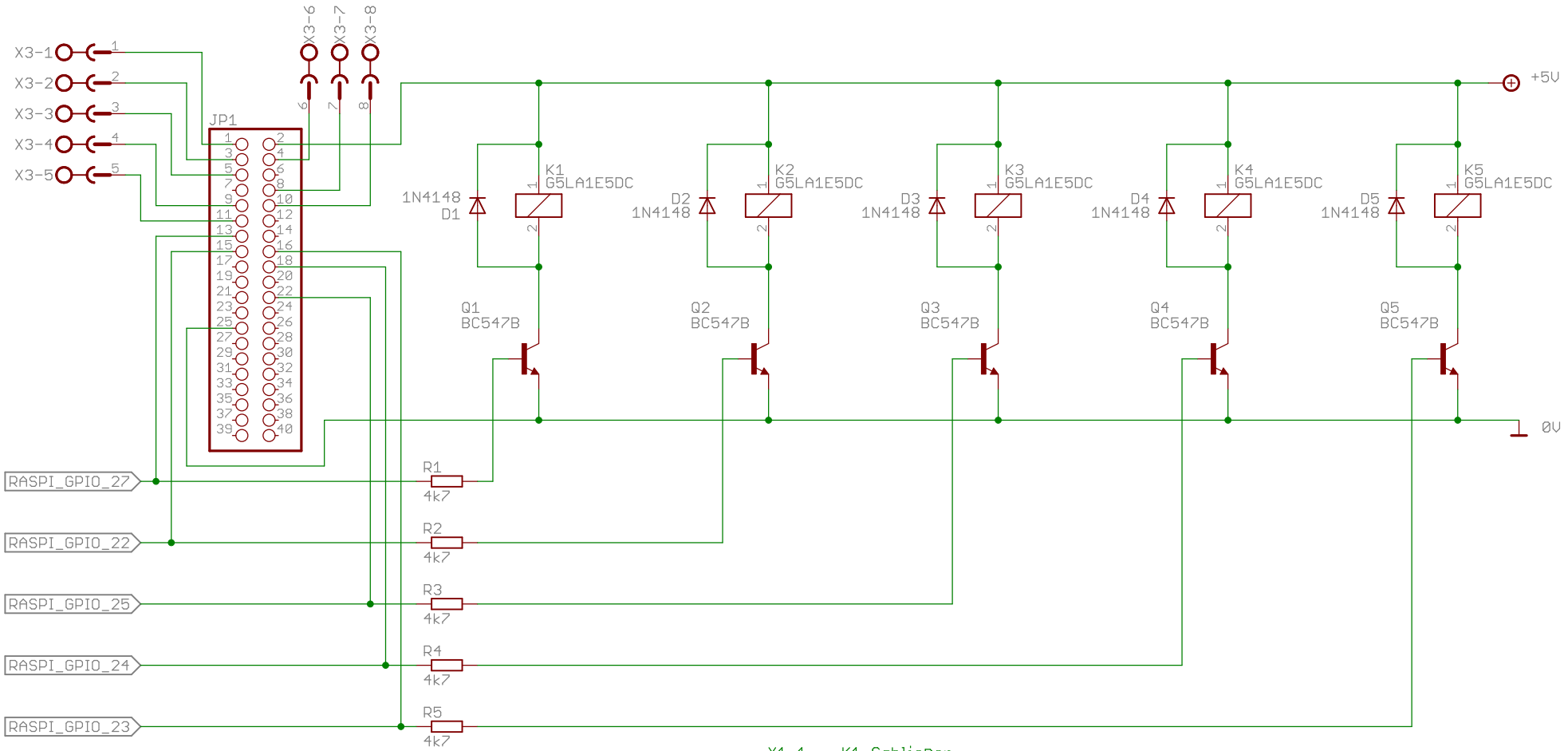

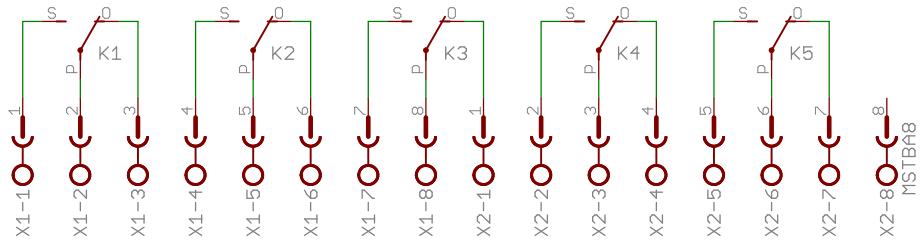

X1-1 ... K1 Schließer
X1-2 ... K1 Common
X1-3 ... K1 Öffner

X1-4 ... K2 Schließer
X1-5 ... K2 Common
X1-6 ... K2 Öffner

X1-7 ... K3 Schließer
X1-8 ... K3 Common
X2-1 ... K3 Öffner

X2-2 ... K4 Schließer
X2-3 ... K4 Common
X2-4 ... K4 Öffner

X2-5 ... K5 Schließer
X2-6 ... K5 Common
X2-7 ... K5 Öffner

X3-1 ... +3.3V
X3-2 ... GPIO2 / I2C SDA
X3-3 ... GPIO3 / I2C SCL
X3-4 ... GND

X3-5 ... GPIO17 / UART RTS
X3-6 ... +5V
X3-7 ... GPIO14 / UART TXD
X3-8 ... GPIO15 / UART RXD

AUTHOR: Dominic Miglar
dominic.miglar@w1r3.net

TITLE: raspi-gsm-relais

Document Number: 1

REV: 0.1

Date: 06.01.2014 17:32:59

Sheet: 1/1