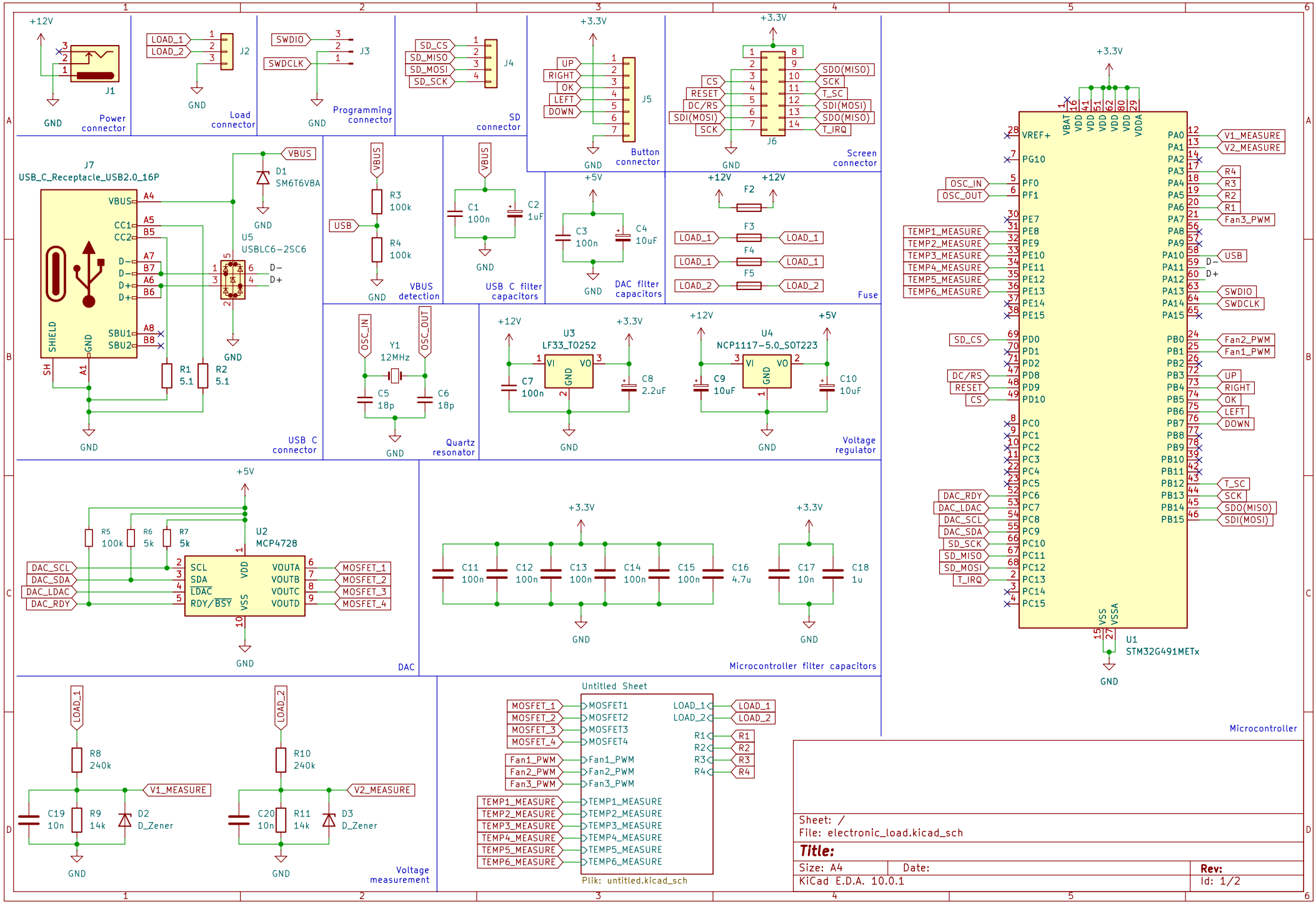
Power connector
Load connector
Programming connector
SD connector
Button connector
Screen connector
USB C connector
VBUS detection
USB C filter capacitors
DAC filter capacitors
Fuse
Quartz resonator
Voltage regulator
DAC
Microcontroller filter capacitors
Voltage measurement
Microcontroller
J7
USB_C_Receptacle_USB2.0_16P
U5
USBLC6-2SC6
D1
SM6T6V8A
U3
LF33_TO252
U4
NCP1117-5.0_SOT223
Y1
12MHz
U2
MCP4728
U1
STM32G491METx
Untitled Sheet
Plik: untitled.kicad_sch
Sheet: /
File: electronic_load.kicad_sch
Title:
Size: A4
Date:
Rev:
KiCad E.D.A. 10.0.1
Id: 1/2

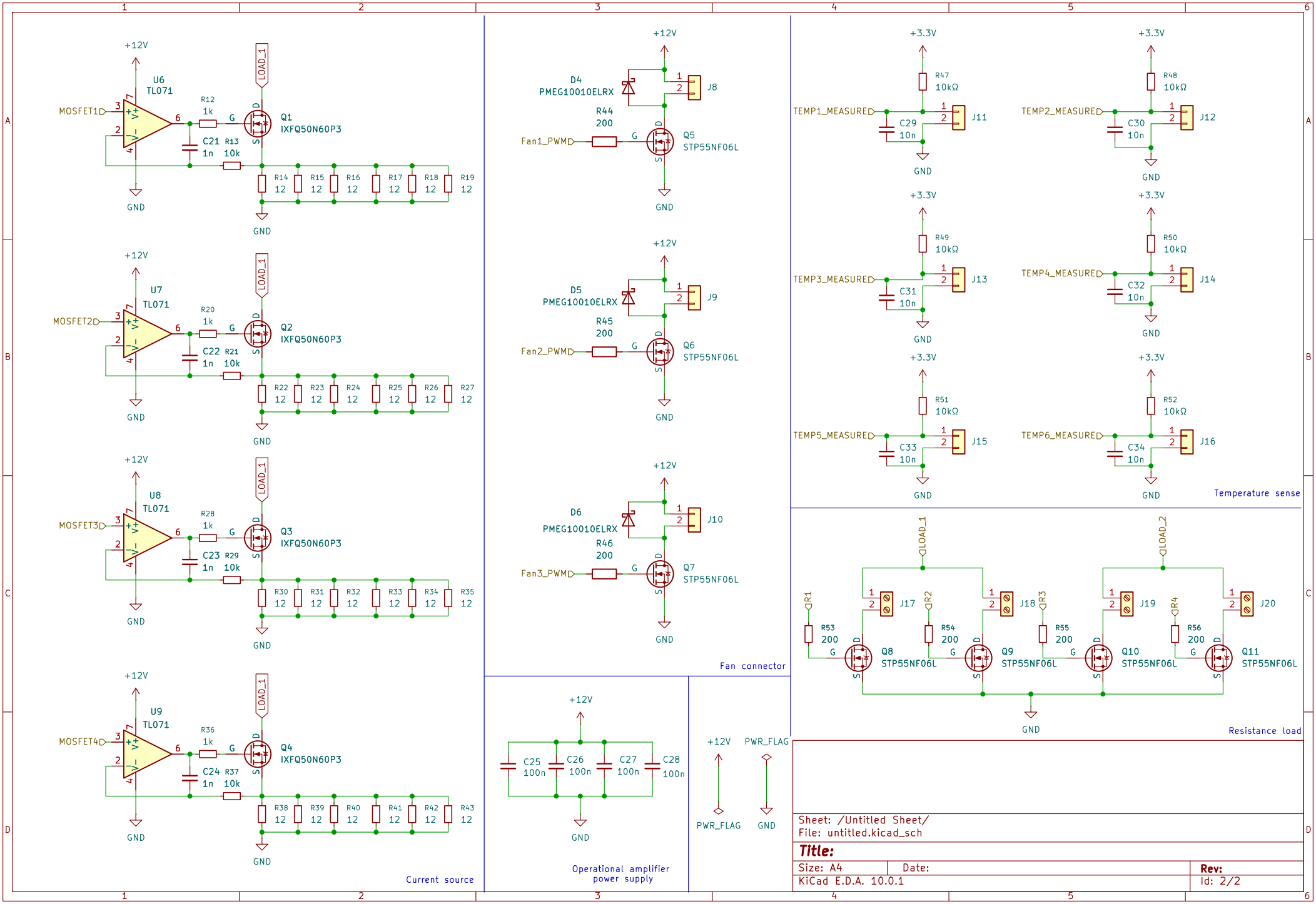
+12V
U6
TL071
MOSFET1
R12
1k
C21
1n
R13
10k
Q1
IXFQ50N60P3
LOAD_1
R14 12
R15 12
R16 12
R17 12
R18 12
R19 12
GND
U7
TL071
MOSFET2
R20
1k
C22
1n
R21
10k
Q2
IXFQ50N60P3
R22 12
R23 12
R24 12
R25 12
R26 12
R27 12
U8
TL071
MOSFET3
R28
1k
C23
1n
R29
10k
Q3
IXFQ50N60P3
R30 12
R31 12
R32 12
R33 12
R34 12
R35 12
U9
TL071
MOSFET4
R36
1k
C24
1n
R37
10k
Q4
IXFQ50N60P3
R38 12
R39 12
R40 12
R41 12
R42 12
R43 12
Current source
D4
PMEG10010ELRX
R44
200
Fan1_PWM
Q5
STP55NF06L
J8
D5
PMEG10010ELRX
R45
200
Fan2_PWM
Q6
STP55NF06L
J9
D6
PMEG10010ELRX
R46
200
Fan3_PWM
Q7
STP55NF06L
J10
Fan connector
C25 100n
C26 100n
C27 100n
C28 100n
Operational amplifier power supply
PWR_FLAG
+3.3V
R47 10kΩ
TEMP1_MEASURED
C29 10n
J11
R48 10kΩ
TEMP2_MEASURED
C30 10n
J12
R49 10kΩ
TEMP3_MEASURED
C31 10n
J13
R50 10kΩ
TEMP4_MEASURED
C32 10n
J14
R51 10kΩ
TEMP5_MEASURED
C33 10n
J15
R52 10kΩ
TEMP6_MEASURED
C34 10n
J16
Temperature sense
LOAD_2
R1
R2
R3
R4
J17
J18
J19
J20
R53 200
R54 200
R55 200
R56 200
Q8
STP55NF06L
Q9
STP55NF06L
Q10
STP55NF06L
Q11
STP55NF06L
Resistance load
Sheet: /Untitled Sheet/
File: untitled.kicad_sch
Title:
Size: A4
Date:
Rev:
KiCad E.D.A. 10.0.1
Id: 2/2