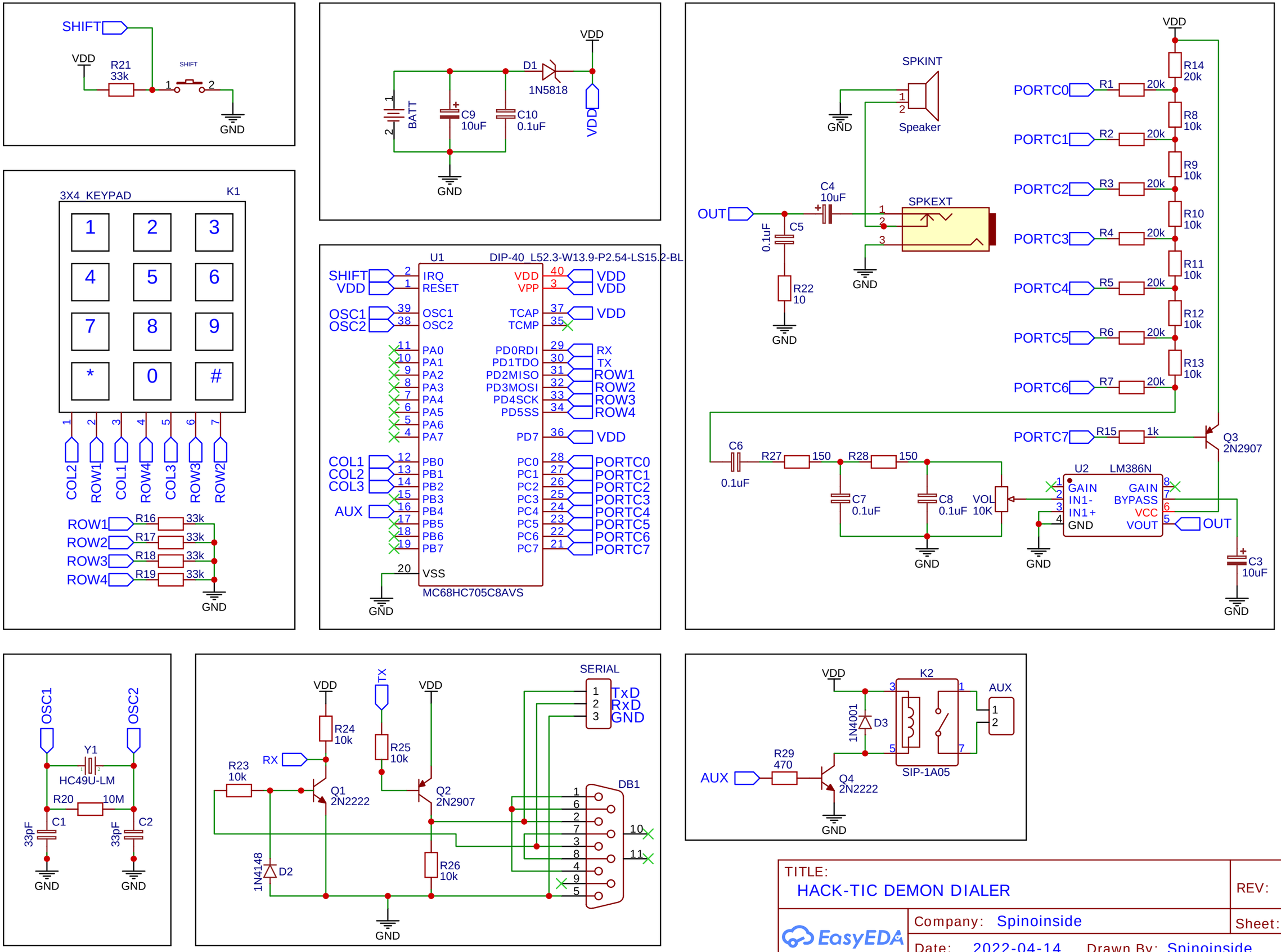
SHIFT
VDD
R21
33k
SHIFT
GND
3X4 KEYPAD
K1
COL2
ROW1
COL1
ROW4
COL3
ROW3
ROW2
ROW1 R16 33k
ROW2 R17 33k
ROW3 R18 33k
ROW4 R19 33k
GND
BATT
C9
10uF
C10
0.1uF
D1
1N5818
VDD
U1
DIP-40_L52.3-W13.9-P2.54-LS15.2-BL
SHIFT
VDD
OSC1
OSC2
COL1
COL2
COL3
AUX
IRQ
RESET
OSC1
OSC2
PA0
PA1
PA2
PA3
PA4
PA5
PA6
PA7
PB0
PB1
PB2
PB3
PB4
PB5
PB6
PB7
VSS
VDD
VPP
TCAP
TCMP
PD0RDI
PD1TDO
PD2MISO
PD3MOSI
PD4SCK
PD5SS
PD7
PC0
PC1
PC2
PC3
PC4
PC5
PC6
PC7
RX
TX
ROW1
ROW2
ROW3
ROW4
PORTC0
PORTC1
PORTC2
PORTC3
PORTC4
PORTC5
PORTC6
PORTC7
MC68HC705C8AVS
SPKINT
Speaker
OUT
C4
10uF
C5
0.1uF
R22
10
SPKEXT
PORTC0 R1 20k R14 20k
PORTC1 R2 20k R8 10k
PORTC2 R3 20k R9 10k
PORTC3 R4 20k R10 10k
PORTC4 R5 20k R11 10k
PORTC5 R6 20k R12 10k
PORTC6 R7 20k R13 10k
PORTC7 R15 1k
Q3
2N2907
C6
0.1uF
R27 150
R28 150
C7
0.1uF
C8
0.1uF
VOL
10K
U2
LM386N
GAIN
IN1-
IN1+
GND
GAIN
BYPASS
VCC
VOUT
OUT
C3
10uF
OSC1
OSC2
Y1
HC49U-LM
R20
10M
C1
33pF
C2
33pF
VDD
TX
R24
10k
R25
10k
R23
10k
RX
Q1
2N2222
Q2
2N2907
1N4148
D2
R26
10k
SERIAL
TxD
RxD
GND
DB1
VDD
K2
AUX
1N4001
D3
R29
470
Q4
2N2222
SIP-1A05
TITLE:
HACK-TIC DEMON DIALER
REV: 1
Company: Spinoinside
Sheet: 1/1
Date: 2022-04-14
Drawn By: Spinoinside
EasyEDA