ESP32 C3

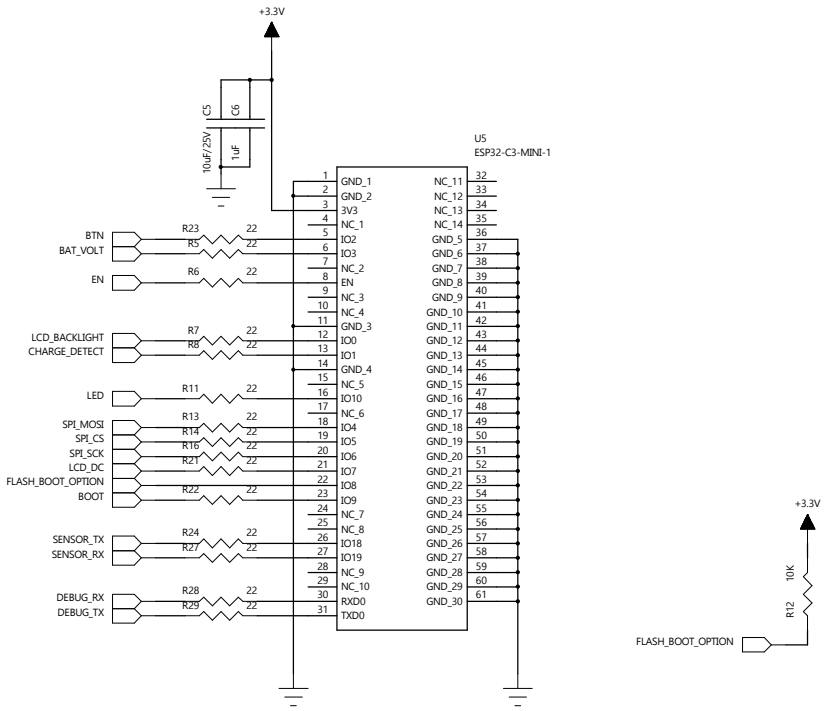

LED

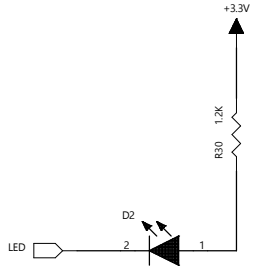

Debug

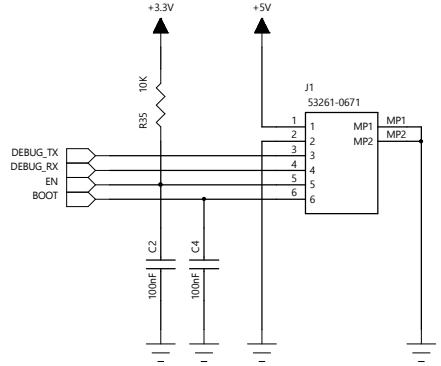

COMPANY:	Hi Genis
TITLE:	ESP32-C3 HMI 2.8" V1.0

CODE:	SIZE:	DRAWING NO:	REV:
	A3		1.0

SCALE:

SHEET: 1 OF 3

USB Power

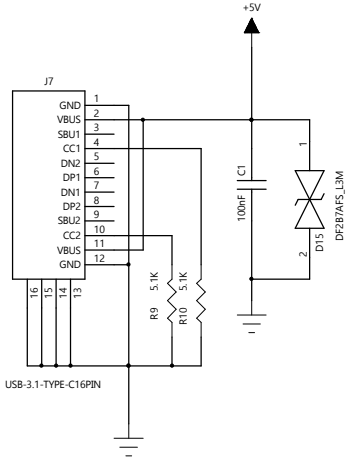

Battery Charging Circuit

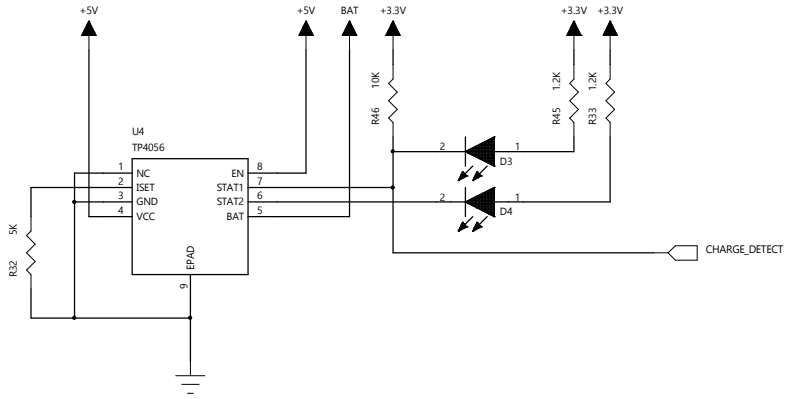

Iout = 1200 / R(kΩ)

ex) R = 1.2kΩ -> 1A

ex) R = 4.99kΩ -> 240mA

Power Source Selection

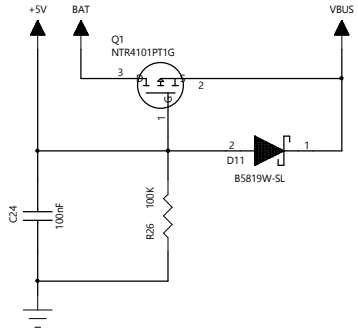

3.3V LDO

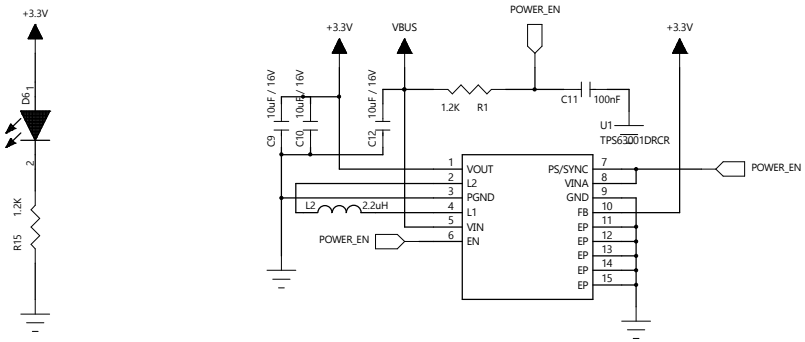

3.7V Battery

3.7V - 500mAH BAT

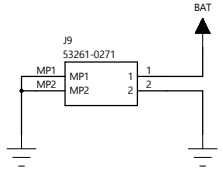

BAT ADC

MAX 4.5V -> 3.26V

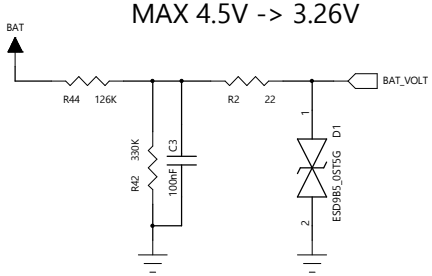

COMPANY:	Hi Genis
TITLE:	ESP32-C3 HMI 2.8" V1.0

CODE:	SIZE:	DRAWING NO:	REV:
	A3		1.0

SCALE:

SHEET: OF 2 3

BUTTON

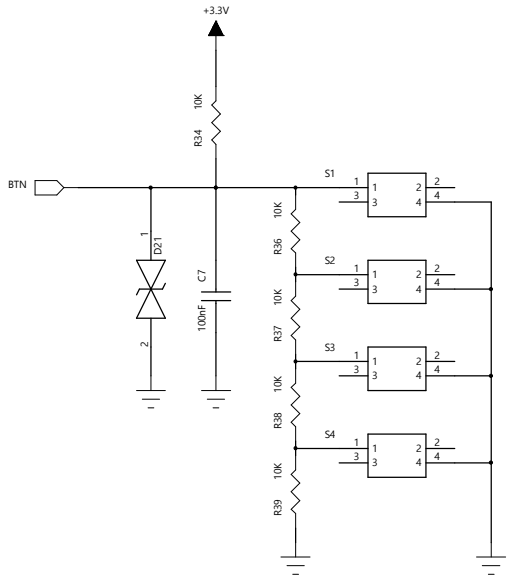

LCD

LED 전류 (30 ohm 시) : 3.2V -> 3.3mA

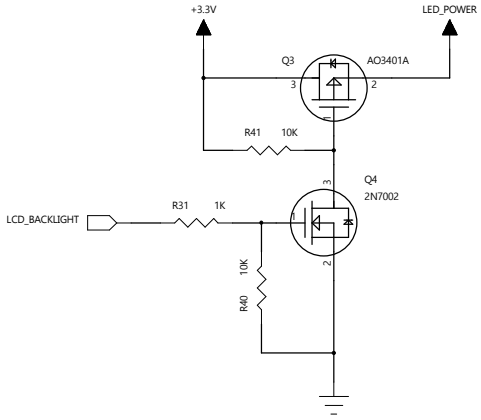

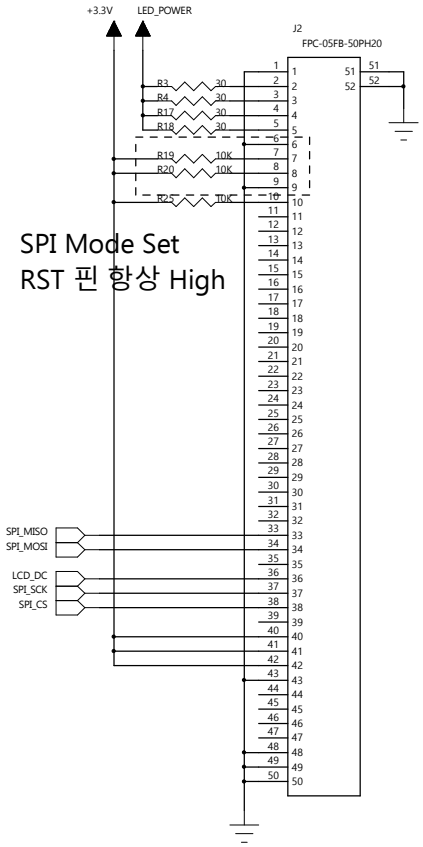

SPI Mode Set
RST 핀 항상 High

SENSOR UART

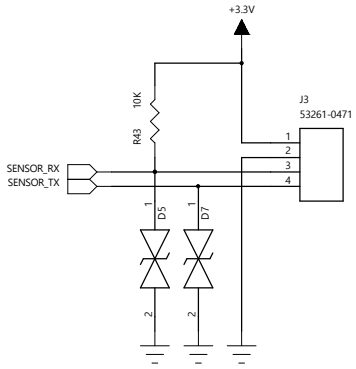

COMPANY: Hi Genis			
TITLE: ESP32-C3 HMI 2.8" V1.0			
CODE:	SIZE: A3	DRAWING NO:	REV: 1.0
SCALE:		SHEET: OF 3 3	