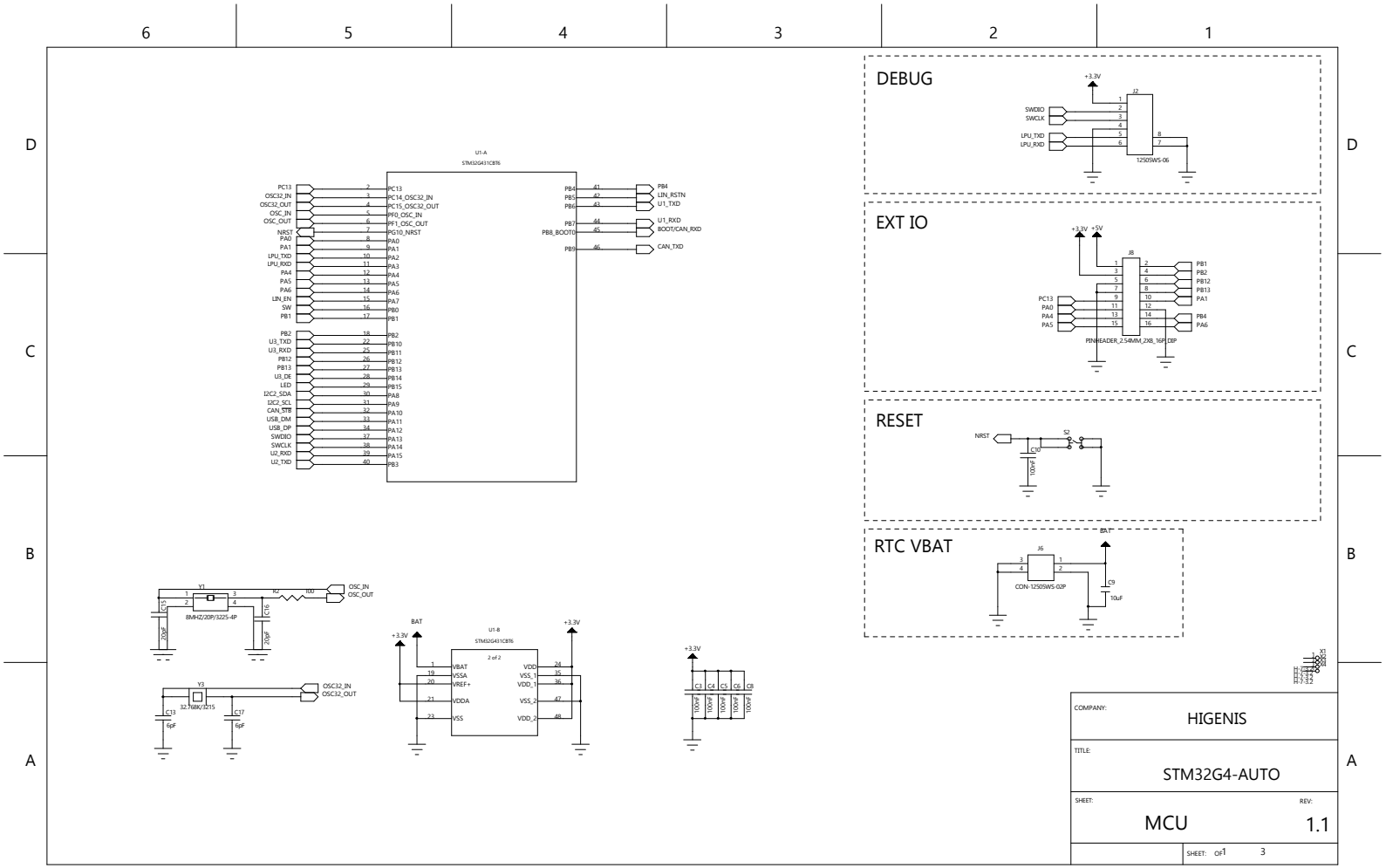
DEBUG
+3.3V
J2
SWDIO
SWCLK
LPU_TXD
LPU_RXD
12505WS-06
EXT IO
+3.3V
+5V
J8
PC13
PA0
PA4
PA5
PB1
PB2
PB12
PB13
PA1
PB4
PA6
PINHEADER_2.54MM_2X8_16P_DIP
RESET
NRST
S2
C10
100nF
RTC VBAT
BAT
J6
CON-12505WS-02P
C9
10uF
U1-A
STM32G431CBT6
PC13
OSC32_IN
OSC32_OUT
OSC_IN
OSC_OUT
NRST
PA0
PA1
LPU_TXD
LPU_RXD
PA4
PA5
PA6
LIN_EN
SW
PB1
PB2
U3_TXD
U3_RXD
PB12
PB13
U3_DE
LED
I2C2_SDA
I2C2_SCL
CAN_STB
USB_DM
USB_DP
SWDIO
SWCLK
U2_RXD
U2_TXD
PB4
PB5
PB6
PB7
PB8_BOOT0
PB9
LIN_RSTN
U1_TXD
U1_RXD
BOOT/CAN_RXD
CAN_TXD
Y1
8MHZ/20P/3225-4P
R2
R0
C15
C16
20pF
Y3
32.768KHz/3215
C13
C17
6pF
U1-B
STM32G431CBT6
2 of 2
BAT
+3.3V
VBAT
VSSA
VREF+
VDDA
VSS
VDD
VSS_1
VDD_1
VSS_2
VDD_2
C3
C4
C5
C6
C8
100nF
COMPANY:
HIGENIS
TITLE:
STM32G4-AUTO
SHEET:
MCU
REV:
1.1
SHEET: 3 OF 3

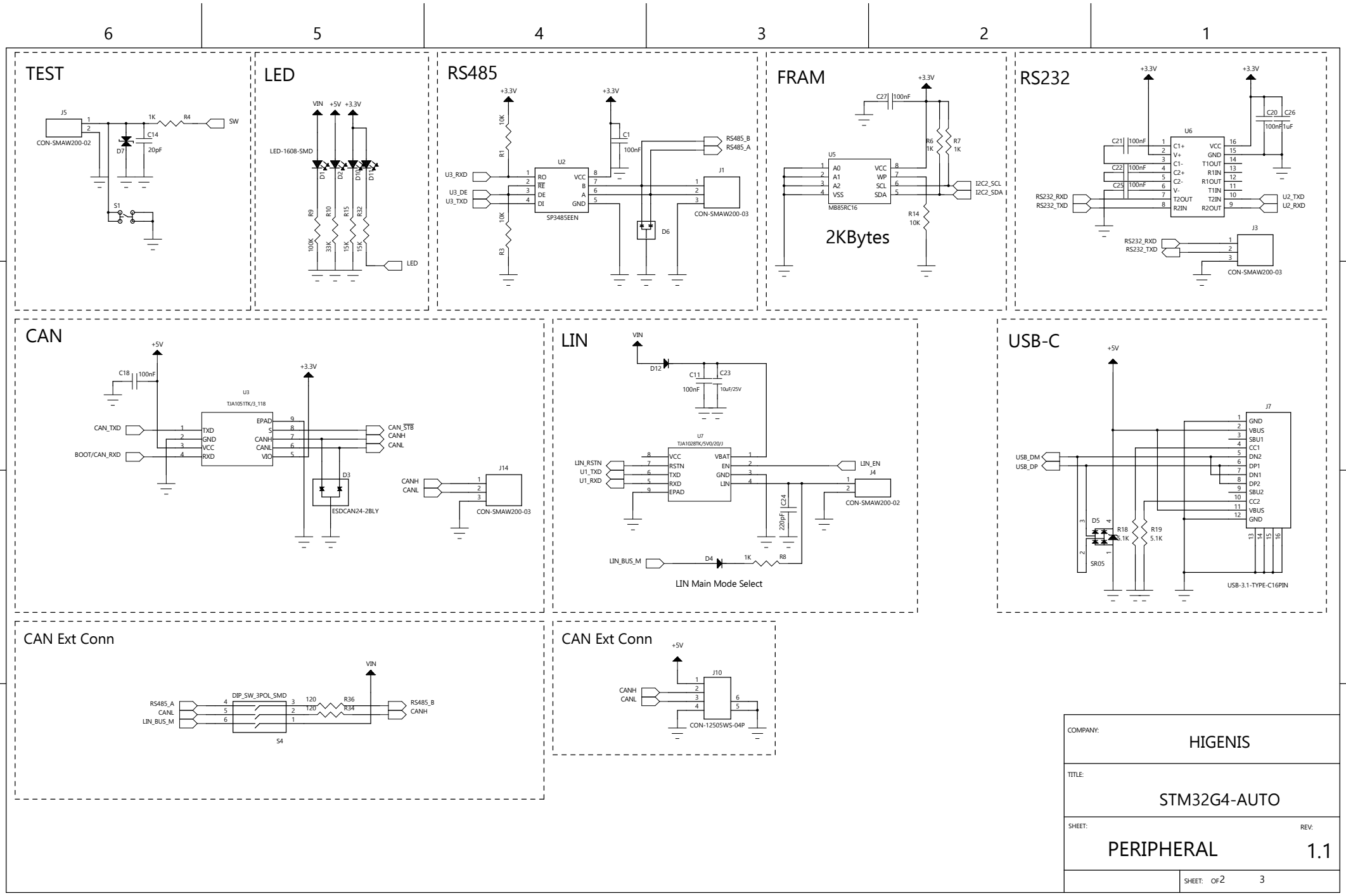
TEST
J5
CON-SMAW200-02
1K
R4
SW
C14
20pF
D7
S1
LED
VIN
+5V
+3.3V
LED-1608-SMD
D1
D2
D10
D11
R9
R10
R15
R22
100K
33K
15K
15K
LED
RS485
+3.3V
10K
R1
U3_RXD
U3_DE
U3_TXD
U2
RO
RE
DE
DI
VCC
B
A
GND
SP3485EEN
C1
100nF
RS485_B
RS485_A
J1
CON-SMAW200-03
D6
R3
FRAM
+3.3V
C27
100nF
U5
A0
A1
A2
VSS
VCC
WP
SCL
SDA
MB85RC16
R6
1K
R7
1K
I2C2_SCL
I2C2_SDA
R14
10K
2KBytes
RS232
+3.3V
C20
C26
100nF
1uF
U6
C21
100nF
C22
100nF
C25
100nF
C1+
V+
C1-
C2+
C2-
V-
T2OUT
R2IN
VCC
GND
T1OUT
R1IN
R1OUT
T1IN
T2IN
R2OUT
RS232_RXD
RS232_TXD
U2_TXD
U2_RXD
J3
CON-SMAW200-03
CAN
+5V
C18
100nF
+3.3V
U3
TJA1051TK/3_118
CAN_TXD
BOOT/CAN_RXD
TXD
GND
VCC
RXD
EPAD
S
CANH
CANL
VIO
CAN_STB
CANH
CANL
D3
ESDCAN24-2BLY
J14
CANH
CANL
CON-SMAW200-03
LIN
VIN
D12
C11
100nF
C23
10uF/25V
U7
TJA1028TK/5V0/20/J
LIN_RSTN
U1_TXD
U1_RXD
VCC
RSTN
TXD
RXD
EPAD
VBAT
EN
GND
LIN
LIN_EN
J4
CON-SMAW200-02
C24
220pF
LIN_BUS_M
D4
1K
R8
LIN Main Mode Select
USB-C
+5V
J7
USB_DM
USB_DP
GND
VBUS
SBU1
CC1
DN2
DP1
DN1
DP2
SBU2
CC2
VBUS
GND
D5
SR05
R18
5.1K
R19
5.1K
USB-3.1-TYPE-C16PIN
CAN Ext Conn
VIN
DIP_SW_3POL_SMD
RS485_A
CANL
LIN_BUS_M
120
120
R36
R34
RS485_B
CANH
S4
CAN Ext Conn
+5V
J10
CANH
CANL
CON-12505WS-04P
COMPANY:
HIGENIS
TITLE:
STM32G4-AUTO
SHEET:
PERIPHERAL
REV:
1.1
SHEET: OF 2 3

POWER

VIN : 10 -18V

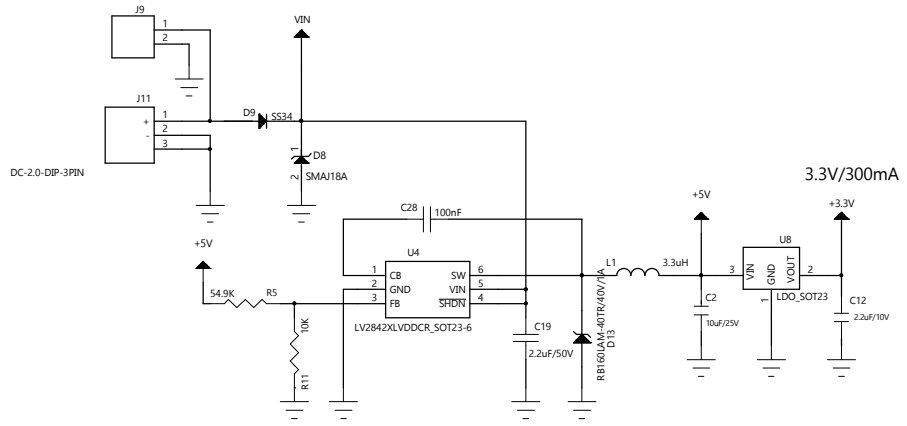

COMPANY:	HIGENIS
TITLE:	STM32G4-AUTO
SHEET: POWER	REV: 1.1
SHEET: 3 OF 3	