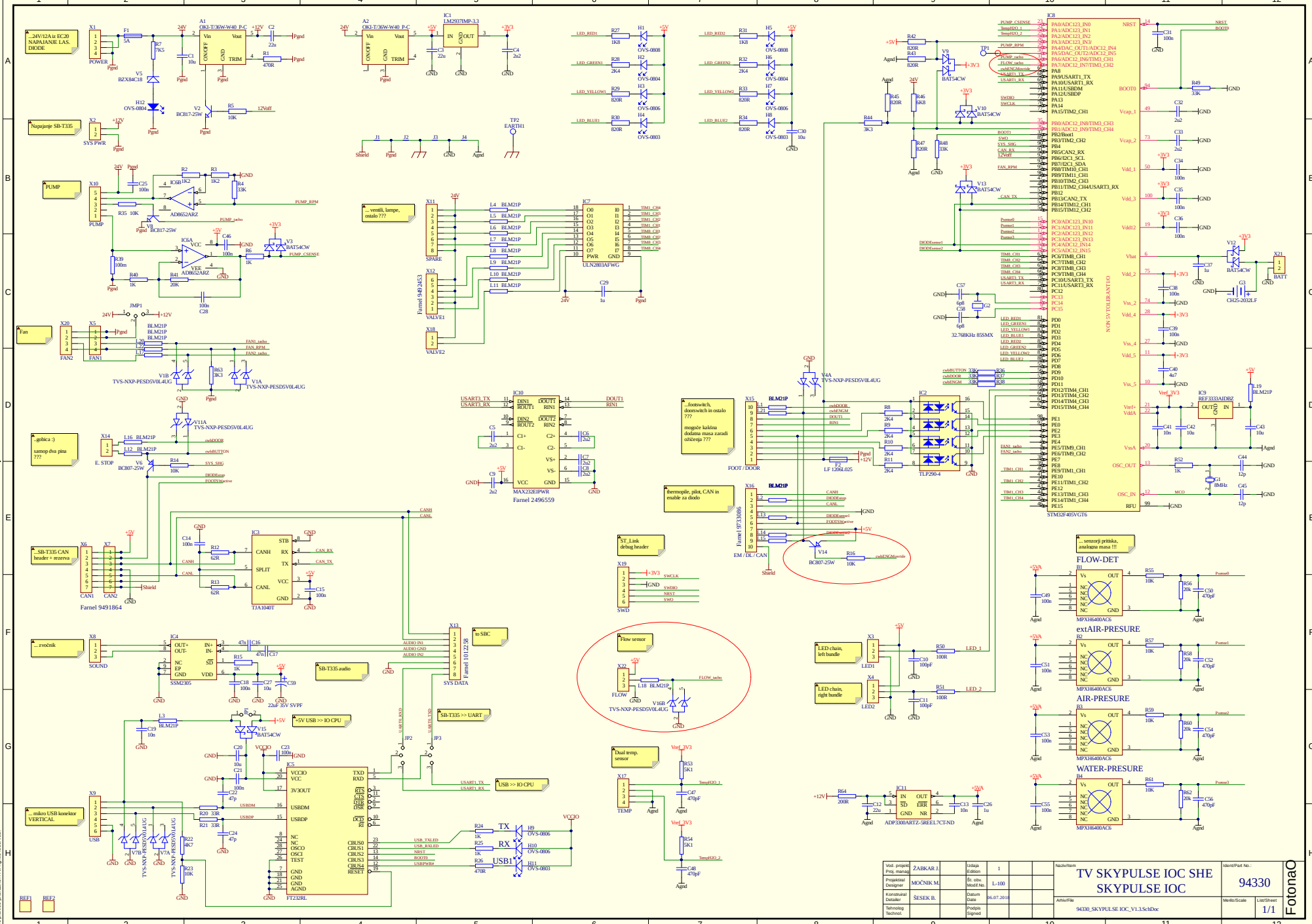
...24V/12A iz EC20 NAPAJANJE LAS. DIODE
Napajanje SB-T335
PUMP
Fan
...gobica :) samop dva pina ???
...SB-T335 CAN header + rezerva
... zvočnik
... mikro USB konektor VERTICAL
... ventili, lampe, ostalo ???
...footswitch, doorswitch in ostalo ???
mogoče kakšna dodatna masa zaradi ozičenja ???
thermopile, pilot, CAN in enable za diodo
ST_Link debug header
flow sensor
1kat temp. sensor
LED chain, left bundle
LED chain, right bundle
... senzorji pritiska, analogna masa !!!
SB-T335 audio
to SBC
+5V USB >> IO CPU
USB >> IO CPU
SB-T335 >> UART
FLOW-DET
extAIR-PRESURE
AIR-PRESURE
WATER-PRESURE
STM32F405VGT6
Farnel 9491864
Farnel 2496559
Farnel 9492453
Farnel 1012298
Farnel 1973086
TV SKYPULSE IOC SHE
SKYPULSE IOC
94330
1/1
94330_SKYPULSE IOC_V1.3.SchDoc
ŽABKAR J.
MOČNIK M.
ŠESEK B.
06.07.2016
FotonaO