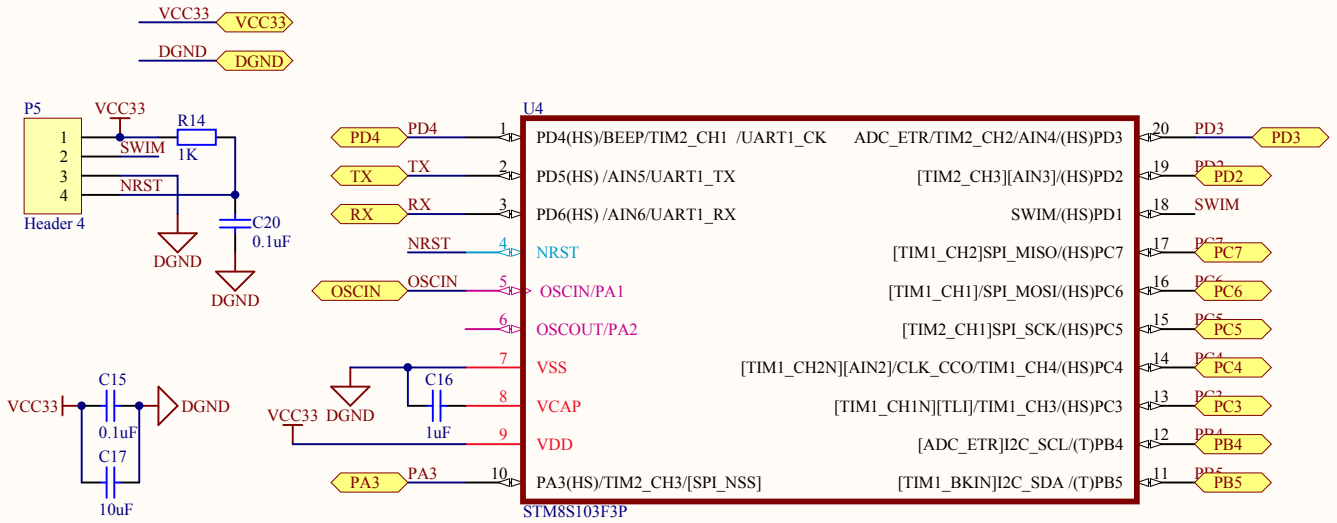

Title		
Size: A4	Number	Revision
Date: 2016/7/8		Sheet of
File: C:\svn\..\STM8.SchDoc		Drawn By:

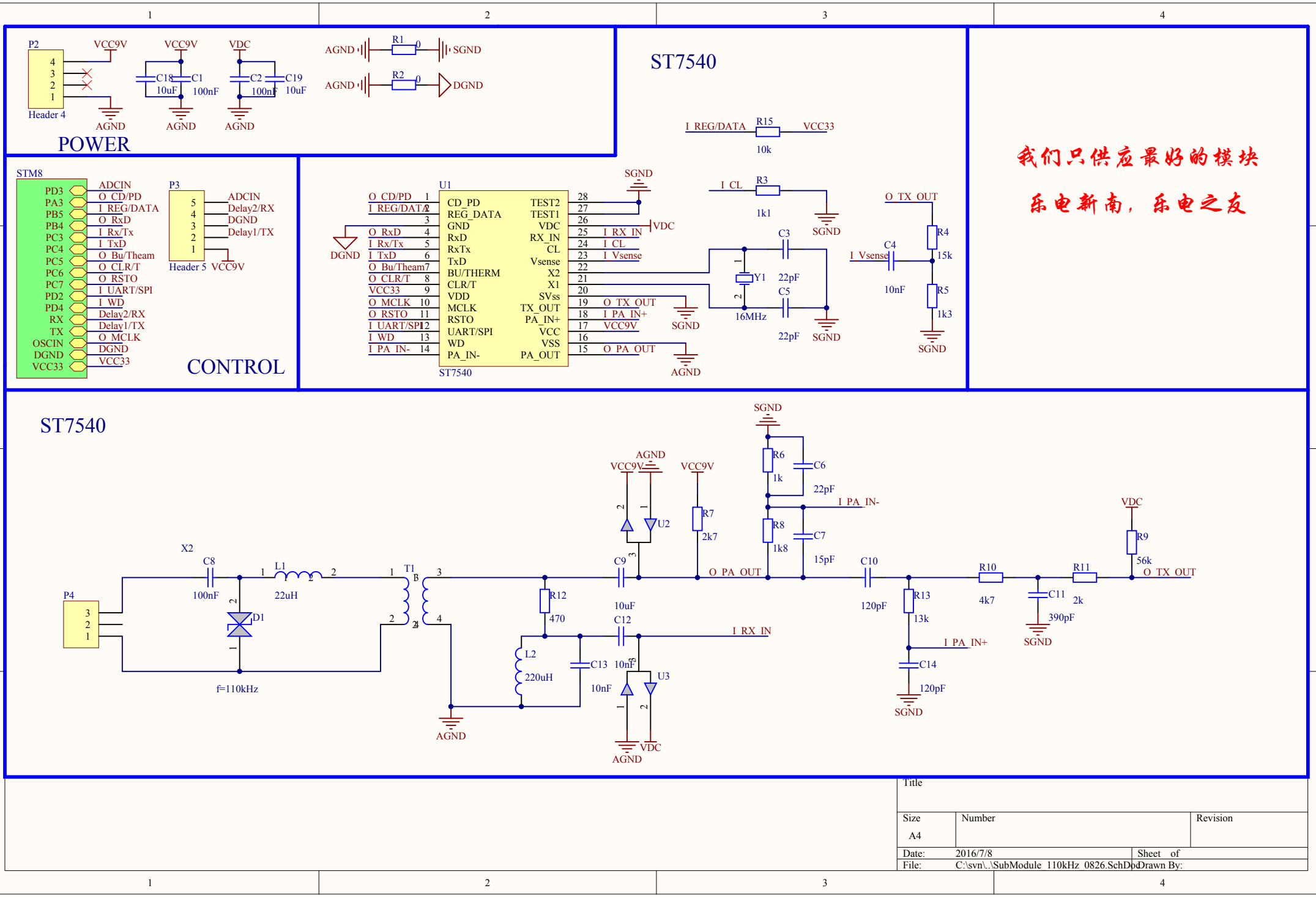

Title		
Size A4	Number	Revision
Date: 2016/7/8		Sheet of
File: C:\svn\..\SubModule_110kHz_0826.SchDoc		Drawn By:

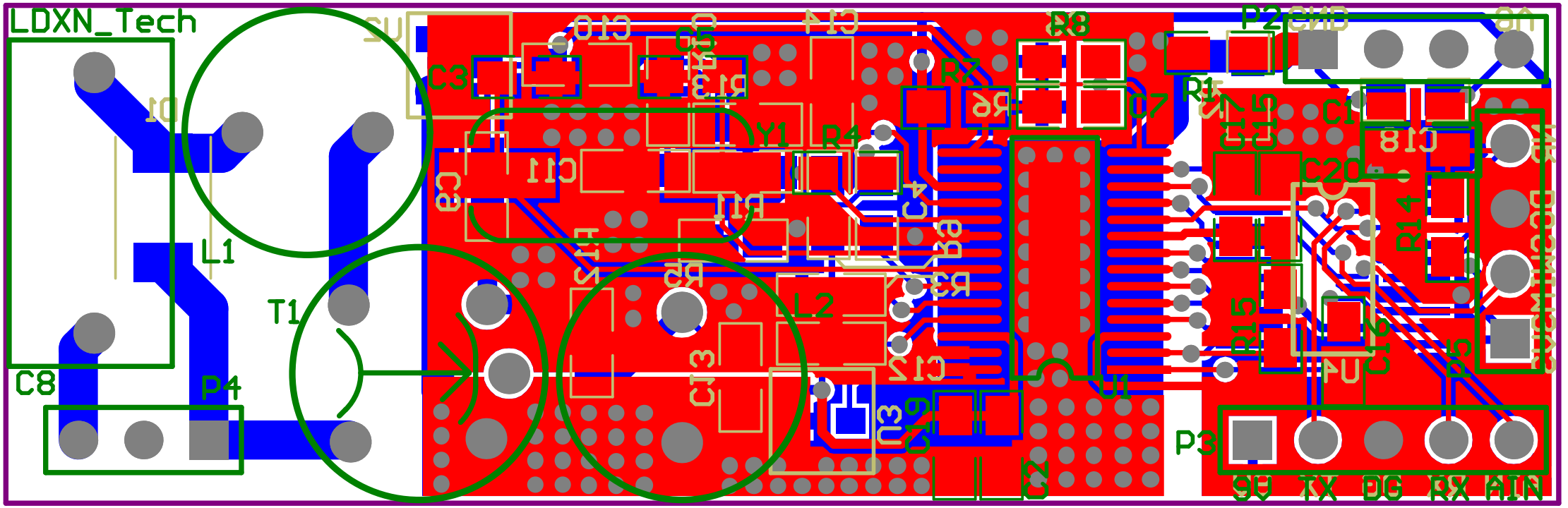
LDXN_Tech
L1
T1
C8
P4
C3
Y1
R4
L2
P2
P3
C1
C20
R14
R15
C16
C18
C7
R1
R8
R7
C5
C11
C12
C13
C9
U1
U3
U4
9V
TX
DG
RX
AIN

Comment	Value	Description	Designator	Footprint	Quantity
BAT54S		BAT54S	U2, U3	BAT54S	2
Cap	0.1uF	Capacitor	C20	CAP0805	1
Cap	0.1uF, 1uF, 10nF, 10uF, 15pF, 22pF, 100nF, 120pF, 390pF	Capacitor	C1, C2, C3, C4, C5, C6, C7, C9, C10, C11, C12, C13, C14, C15, C16, C17, C18, C19	0805	18
Cap	100nF	直插，X2电容	C8	X2-400	1
Header 3		长排针,2.54间距	P4	HDR1X3	1
Header 4		弯排针,2.54间距，长排针,2.	P2, P5	HDR1X4	2
Header 5		Header, 5-Pin	P3	HDR1X5	1
Inductor	22uH, 220uH	圆柱型电感，直插，带屏蔽	L1, L2	L8.6	2
Res2	0, 1k, 1k1, 1k3, 1k8, 2k, 2k7, 4k7, 10k, 13k, 15k, 56k, 470	Resistor	R1, R2, R3, R4, R5, R6, R7, R8, R9, R10, R11, R12, R13, R14, R15	0805	15
SM6T12CA		SM6T12CA	D1	SM6T12CA	1
ST7540		ssop28	U1	ST7540	1
STM8S103F3P		ST 8-bit Microcontroller	U4	TSSOP20	1
Trans		定制电感线圈	T1	L10_1	1
XTAL	16MHz	Crystal Oscillator	Y1	XTAL	1